Chapter 9-5

CONCRETE STANDARDS

Sections.

9-5-1: General Provisions

(A) **General.** Concrete work within any street, park, trail or alley ROW or in any part of the water system, wastewater system, parks, and storm drainage system of the City shall meet the requirements of these Standards and Specifications. Engineering, plans, licenses, permits, inspections, warranties and acceptance shall be as detailed in these applicable Standards and Specifications for the type of construction involved.

Permits shall be obtained before work begins. Responsible Party shall give the City Engineer forty-eight (48) hours notice and inspection shall be made before placement of concrete can occur. Written or oral notice of Inspector's approval to place materials shall be obtained by Responsible Party after inspection has been made and before concrete is placed. Written notice of rejection shall be given to Responsible Party in the event any aforementioned conditions given by the City Engineer are not met, and work shall be halted until such time as corrective action is taken. Copies of the approved drawings and the permit shall be on the job site and available to the Inspector.

9-5-2: Mix Design Criteria

(A) **General.** Concrete shall be thoroughly mixed in a batch mixer of an approved type and capacity for a period of not less than two (2) minutes after the materials, including the water, have been placed in the drum. During the mixing period, the drum shall be operated at the speed specified by the manufacturer of the equipment. The entire contents of the mixer shall be discharged before recharge, and the mixer shall be cleaned frequently. The concrete shall be mixed only in quantities that are required for immediate use. No retempering of concrete shall be permitted. Hand-mixed concrete shall not be permitted except by written approval of the City Engineer, and then in only small quantities or in case of an emergency.

(B) **Proportioning.** Proportioning the "dry" constituents of concrete mixtures shall be accomplished by weighing. The Responsible Party shall provide adequate and accurate scales for this work. The accuracy and tolerances of all scales shall be as prescribed by state law. The scales shall be sealed by the measurement standards section of the Colorado Department of Agriculture at least once each year, each time the scales are relocated, and as often as the engineer deems necessary. Weighers certified by the measurement standards section of the Colorado Department of Agriculture shall operate scales. The certified weigher shall perform the duties according to the Colorado Department of Agriculture's regulations. There shall be no variance permitted in the minimum cement factor (sacks per cubic yard) as specified for the mix design. The total quantity of mixing-water per sack of cement, including free water in the aggregates, shall not exceed the maximum specified herein. The Responsible Party shall develop the proper proportions of aggregates, cement and water that shall meet or exceed minimum requirements of these Standards and Specifications. Mix design shall be submitted to the City, along with at least two (2) sets of certified twenty-eight (28) day compressive strength test results, for review

and approval. No concrete shall be incorporated into the work until the City Engineer approves the proportions.

(C) **Classification.** The classification shall conform to CDOT Standard Specifications Table 601-1 for concrete classes and mix requirements for classes B or D, except that Number 57 or Number 67 shall be used.

(D) **Ready-Mixed Concrete.** The use of ready-mixed concrete in no way relieves the Responsible Party of proper proportion, mix, delivery, or placement of concrete; concrete must conform to the requirements of these Standards and Specifications and ASTM C-94.

(1) Concrete shall be continuously mixed or agitated from the time the water is added until the time of use and shall be completely discharged from the truck mixer or truck agitator within one and one-half (1½) hours after it comes in contact with the mixing water or with the aggregates. Retempered concrete shall not be allowed.

(2) The City shall have free access to the mixing plant during times of operation. The organization supplying the concrete shall have sufficient plant and transportation facilities to assure continuous delivery of the concrete at the required rate. (The Responsible Party shall collect batch tickets from the driver for concrete used on the project and deliver them to the City Engineer).

(3) Batch tickets shall provide the following information:

(a) weight and type of cement;
(b) weights of fine and coarse aggregates;
(c) volume (in gallons) of water including surface water on aggregates;
(d) quantity (cubic yards) per batch;
(e) times of batching and discharging of concrete;
(f) name of batch plant;
(g) name of Responsible Party;
(h) name and amount of admixture if approved; and,
(i) date and truck number.

9-5-3: Materials Specifications

(A) **General.** Concrete shall be composed of Portland cement, aggregate, and water, and shall be reinforced with steel bars, steel wire fabric or fibrous reinforcing where required. No admixture other than air-entraining agents, or water reducing agents shall be used without written permission from the City Engineer.

(B) **Cement.** Cement used in concrete work will be Portland cement conforming to the requirements of ASTM C-l50, Type I, IA, Type I/II modified, II, Type V, or IIA. In general, Type II or IIA shall be used in concrete which shall be in contact with the soil, unless otherwise allowed or directed by the City Engineer. Cement that for any

reason has become partially set or that contains lumps of caked cement shall be rejected.

The Responsible Party shall ensure the proper storage of cement until it is used. No damaged cement shall be used in the work, and such cement shall be immediately removed from the site when so ordered by the City Engineer. When requested by the City Engineer, the Responsible Party shall, at his own cost and expense, furnish a certificate from an acceptable testing laboratory for each batch of cement from which cement is taken for use in the work, stating that the cement meets the requirements of these Standards and Specifications for Portland cement.

(C) **Water.** Water for concrete shall be clean and free from sand, oil, acid, alkali, organic matter, or other deleterious substances. Water from public supplies or water which has been proven to be suitable for drinking is satisfactory.

(D) **Admixtures.** The Responsible Party shall use air-entraining admixtures for concrete that will have exposed surfaces. The Responsible Party may elect to use another admixture provided the City Engineer specifically approves the admixture. Admixtures to be used for plasticizing, densifying, or acceleration of hardening of concrete shall, when added to the mixture, produce a concrete of the specified strengths in seven (7) day and twenty-eight (28) day tests. Documented evidence of acceptability shall be required when new or unknown admixtures are proposed for use. Air-entraining admixtures shall conform to the requirements of ASTM C-260.

(E) **Fine Aggregate.** Fine aggregate shall be composed of clean, hard, durable, uncoated particles of sand, free from injurious amounts of clay, dust, soft or flaky particles, loam, shale, alkali, organic matter, or other deleterious matter. Fine aggregate shall be well graded from coarse to fine and when tested by means of laboratory sieves shall meet the CDOT Concrete Aggregate Gradation Table and shall also conform to AASHTO M6:

Sieve Size	Percent Passing
⅜"	100
#4	95 - 100
#16	45 - 80
#50	10 - 30
#100	2 - 10

(F) **Coarse Aggregate.** The coarse aggregate shall consist of broken stone or gravel composed of clean, hard, tough and durable stone and shall be free from soft, thin, elongated or laminated pieces, disintegrated stone, clay, loam, organic, or other deleterious matter.

Coarse aggregate shall conform to Number 57 or Number 67 course aggregate from the CDOT Concrete Aggregate Gradation Table, and shall also conform to AASHTO M43.

(G) **Fibrous Reinforcing.** Fibrous reinforcing shall be used in Portland cement concrete used for curb, gutter, sidewalks, curb turn fillets, cross pans, and valley pans. Fibrous concrete reinforcement shall consist of one hundred (100) percent virgin polypropylene fibrillated fibers specifically manufactured for use as concrete reinforcement, containing no reprocessed olefin materials. Fibrous concrete reinforcement shall be as manufactured by Fibermesh Company, 4019 Industry Drive, Chattanooga, Tennessee 37416, or approved equivalent. Substitutions may be considered at the discretion of the City Engineer. The following shall be submitted to the City Engineer:

(1) One copy of manufacturer's printed product data, clearly marked, indicating proposed fibrous concrete reinforcement materials. Printed data should stateone and one-half (1.5) lbs of fiber to be added to each cubic yard of each type of concrete.

(2) One (1) copy of manufacturer's printed batching and mixing instructions.

(3) One copy of a certificate prepared by the concrete supplier stating that the approved fibrous concrete reinforcement materials at the rate of one and one-half (1.5) pounds per cubic yard were added to each batch of concrete delivered to the project site. Each certificate shall be accompanied by one (1) copy of each batch delivery ticket indicating the amount of fibrous concrete reinforcement material added to each batch of concrete.

9-5-4: Steel Reinforcement and Forms

(A) **General.** Before being positioned, reinforcing steel shall be thoroughly cleaned of mill and rust scale and of coatings that will destroy or reduce the bond. Where there is delay in depositing concrete, reinforcement shall be re-inspected and, if necessary, cleaned. Reinforcement shall be carefully formed to the dimensions indicated on the plans by the cold bending method. Cold bends shall be made around a pin having a diameter of six (6) or more times the diameter of the reinforcing bars. Reinforcement shall not be bent and then straightened. Bars with kinks or bends not shown on the plans shall not be used. Precast mortar blocks, or other non-metal supports shall be as approved by ACI. Responsible Party shall submit to the City Engineer shop drawings of the reinforcement for approval. The City Engineer's approval of shop drawings and bar schedules shall not relieve the Responsible Party of fulfilling his responsibilities as outlined in the plans and specifications.

(B) **Steel Placement.** Reinforcing steel shall be accurately placed and secured against displacement by using annealed iron wire no thinner than No. l8 gauge, or by suitable clips at intersections. Where necessary, reinforcing steel shall be supported by metal chairs or spacers, precast mortar blocks, or metal hangers. Splicing of bars, except where shown on the plans, shall not be permitted without approval of the City Engineer.

Unless otherwise shown on the plans, the minimum clear cover for reinforcing steel shall be the following, which is specified in ACI 30l, Section 5.5:

(1) Bottom bars on soil bearing foundations and slabs: three (3) inches

(2) Bars adjacent to exposed surfaces or earth backfill:

(a) For bars more than three-quarter (¾) inch in diameter, two (2) inches

(b) For bars three-quarter (¾) inch or less in diameter, one and one-half (1½) inches

(3) Interior Surfaces: slabs, walls, joints with one and three-eighths (1⅜) inch diameter or smaller: three-quarter (¾) inch

(C) **Welded Wire.** Welded wire fabric for concrete reinforcement shall be of the gauge, spacing, dimensions, and form specified on the plans or detailed drawings and shall comply with "Specifications for Welded Steel Wire Fabric for Concrete Reinforcement" (ASTM A-185-02) or "Specification for Welded Deformed Steel Wire Fabric for Concrete Reinforcement" (ASTM A-497). Welded wire fabric shall be adequately supported and in no case will WWF smaller than 6X6/4X4 be used.

(D) **Forms.** Whenever necessary, forms shall be used to confine the concrete and shape it to the required lines. Forms shall have sufficient strength to withstand, without deformation, the pressure resulting from placement and vibration of the concrete. Forms shall be constructed so that the finished concrete shall conform to the shapes, lines, grades and dimensions indicated on the approved plans. Any form which is not clean and has not had the surface prepared with a commercial form oil that shall effectively prevent bonding and that will not stain or soften concrete surfaces shall not be used.

Plywood forms, plastic coated plywood forms, or steel forms shall be used for surfaces requiring forming which are exposed to view, whether inside or outside any structure. Surfaces against backfilled earth, interior surfaces of covered channels, or other places permanently obscured from view, may be formed with forms having sub-standard surfaces.

Forms shall not be disturbed until the concrete has cured sufficiently to permit their removal without damaging the concrete or until the forms are not required to protect the concrete from mechanical damage. Minimum time before removal of forms after placing concrete shall be one (1) day for footings and Class "B" concrete and two (2) days for other concrete except in curbs, gutters, sidewalks and pavements. The use of slip forms and concrete paving machines is encouraged.

9-5-5: Concrete Placement

(A) **General.** Before depositing concrete, debris shall be removed from the space to be occupied by the concrete, and the forms, including any existing concrete surfaces, shall be thoroughly wetted. Concrete shall not be placed until forms and reinforcing steel have been inspected and approved by the City Engineer. Concrete shall be handled from the mixer to the place of final deposit as rapidly as possible by methods that prevent separation or loss of ingredients. The concrete shall be deposited in the forms as nearly as practical in its final position to avoid re-handling. It shall be deposited in continuous layers, the thickness of which generally shall not exceed twelve (12) inches. Concrete shall be placed in a manner that shall avoid segregation and shall not be dropped freely more than five (5) feet. If segregation occurs, the City Engineer may require the concrete to be removed and replaced at the Responsible Party's expense. Concrete shall be placed in one continuous operation, except where keyed construction joints are shown on the plans or as approved by the City Engineer. Concrete slump shall not exceed four (4) inches. Delays in excess of thirty (30) minutes may require removal and replacement of that pour, as determined by the City Engineer.

(B) **Subgrade Preparation.** The subgrade shall be excavated or filled to the required grades and lines. Soft, yielding, or otherwise unsuitable material shall be removed and replaced with suitable material. Filled sections shall be compacted and compaction shall extend a minimum of six (6) inches outside the form lines. The subgrade shall be compacted to the density shown on the plans and trimmed to provide a uniform surface at the correct elevation.

(C) **Vibrating.** Concrete shall be thoroughly compacted and/or vibrated. Concrete shall be compacted by internal vibration using mechanical vibrating equipment, except that concrete in floor slabs, sidewalks, or curb and gutter, not poured against form linings, shall be either tamped or vibrated. Care shall be taken in vibrating the concrete to vibrate only long enough to bring a continuous film of mortar to the surface. Vibration shall stop before any segregation of the concrete occurs. Mechanical vibrators shall be an approved type as specified in ACI Publication 309, Chapter 5. Vibrators shall not be used to move or spread the concrete.

Any evidence of the lack of consolidation or over-consolidation shall be regarded as sufficient reason to require the removal of the section involved and its replacement with new concrete at the Responsible Party's expense. The Responsible Party shall remedy any defects in the quality and appearance of the completed work.

(D) **Workability.** The consistency of concrete shall be kept uniform for each class of work and shall be checked by means of slump tests or Kelly ball tests. The workability of the concrete shall be varied as directed by the City Engineer. Concrete shall have a consistency such that it can be worked into corners and angles of the forms and around joints, dowels and tie-bars by the construction methods, which are being used without excessive spading, segregation or undue accumulation of water or latent material on the surface. If, through accident, intention, or error in mixing, concrete fails to conform to the proportions of the approved mix design, such concrete shall not be incorporated in the work but shall be properly disposed of off

the project site as waste material at the Responsible Party's expense. If water is added at the job site, slump tests shall be run and test cylinders cast following the addition of the water. In no case shall concrete slump exceed four (4) inches. Expenses incurred in excess of ordinary tests shall be borne by the Responsible Party.

(E) **Backfilling.** When side forms are removed and the concrete has gained sufficient strength, the space adjoining the concrete shall be promptly backfilled with suitable material, properly compacted, and brought flush with the surface of the concrete and adjoining ground surface. In embankments, the backfill shall be level with the top of the concrete for at least two (2) feet and then sloped as shown on the drawings or as directed by the City Engineer.

When the area behind the walk is to be paved, a minimum of six (6) inches of base course and three (3) inches of asphalt surfacing shall be used and shall be constructed in accordance with these Standards and Specifications. Existing pavement that is damaged during construction shall be repaired by the Responsible Party at his expense. Patching shall match existing asphalt or concrete.

(F) **Repairs.** After stripping of the forms, if any concrete is found to be not formed as shown on the drawings or is out of alignment or level, or shows a defective surface, it shall be removed and replaced by the Responsible Party at his expense unless the City Engineer gives written permission to patch the defective area. In this case, patching shall be done as described in the following paragraphs. Defects that require replacement or repair are those that contain honeycomb, damage due to stripping of forms, loose pieces of concrete, bolt-holes, tie-rod holes, uneven or excessive ridges at form joints, and bulges due to movement of the forms.

(1) Ridges and bulges shall be removed by grinding.

(2) Honeycombed and other defective concrete that does not affect the integrity of the structure shall be chipped out, and the vacated areas shall be filled in a manner acceptable to the City Engineer. The repaired area shall be patched with a non-shrink, non-metallic grout with a minimum compressive strength of five thousand (5,000) psi in twenty-eight (28) days. Repair areas treated with an epoxy-bonding agent shall have the approval of the City Engineer before the repair filling is placed.

(3) Bolt-holes, tie-rod holes, and minor imperfections as approved by the City Engineer shall be filled with dry-patching mortar composed of one (1) part Portland cement to two (2) parts of regular concrete sand (volume measurement) and only enough water so that after the ingredients are mixed thoroughly, the mortar shall stick together on being molded. Mortar repairs shall be placed in layers and thoroughly compacted by suitable tools. Care shall be taken in filling rod and bolt holes so that the entire depth of the hole is completely filled with compacted mortar. The mortar mix proportions described above are approximate.

(4) Those areas with excessive deficiencies as determined by the City Engineer shall be removed and replaced at the Responsible Party's expense.

(5) Where repairs are made in existing sidewalks, all edges of the old sidewalk allowed to remain shall be sawcut to a minimum depth of two (2) inches. No rough edges shall be permitted where new construction joins the old section. Unless directed by the City Engineer, no section less than five (5) feet in length shall be placed or left in place. Where new sidewalk construction abuts existing sidewalks, the work shall be accomplished so that there is no abrupt change in grade between the old section and the new work. No addition to existing sidewalks or other flat work concrete shall be made less than four (4) feet in width. The City Engineer may require doweling into the existing concrete.

9-5-6: Joints and Joint Spacing

(A) **Expansion Joint.** Expansion joint material shall be provided at the following locations and shall be in place prior to the placement of concrete:

(1) At each end of curb return.
(2) At both edges of driveway.
(3) Between back of sidewalk and driveway slab or service walk.
(4) Between new concrete and existing masonry buildings.
(5) As shown on the drawings.
(6) As directed by the City Engineer.
(7) Between new and existing concrete.
(8) Every one hundred (100) feet in sidewalk curb and gutter when hand-formed.
(9) Every two hundred (200) feet in sidewalk, curb and gutter when placed slip formed.
(10) Inlets

(B) **Contraction Joint.** Transverse joints shall be placed at maximum intervals of ten (10) feet to control random cracking; joints shall be formed, sawed, or tooled to a minimum depth of one-quarter (¼) of the total thickness. If divider plates are used, the maximum depth of plates shall not be greater than one-half (½) depth at the finished surface and shall be no less than one (1) inch.

(C) **Tool Joint.** Tool joints shall be spaced as follows:

(1) Not more than ten (10) feet nor less than five (5) feet apart in curb and gutter and combination curb-sidewalk.

(2) Not more than the width of the sidewalk (up to eight (8) feet), nor less than five (5) feet apart in sidewalk.

(3) At least two (2) joints, equally spaced at not greater than ten (10) foot intervals applicable in driveways.

(4) As directed by the City Engineer.

(D) **Joint Materials.** Joint materials shall conform to AASHTO, ASTM Specifications according to type as follows:

	AASHTO	ASTM
Concrete joint sealer, hot poured elastic or Cold applied conforming to ASTM C920	M173	D6690-01 C920
Preformed expansion joint filler (Bituminous Type)	M 33	D99-98
Preformed sponge rubber and cork expansion joint fillers	M 153	D1752-84
Preformed expansion joint fillers –non-extruding and resilient bitumen	M 213	D1751-99

9-5-7: Finishing and Curing

(A) **Finishing.** Concrete shall be placed and finished under the direction supervision of an individual with a current ACI Concrete Flatwork Technician certification, or approved equal. Exposed faces of curbs and sidewalks shall be finished to true-line and grade as shown on the plans. After the water has stopped bleeding and the water sheen has left the surface, the surface shall be floated to a smooth but not slippery finish. Sidewalk and curb shall be broomed or combed and edged, unless otherwise directed by the City Engineer. After completion of brooming and before concrete has taken its initial set, edges in contact with the forms shall be tooled with an edger having a three-eighth (⅜) inch radius. No dusting or topping of the surface or sprinkling with water to facilitate finishing shall be permitted. Steel trowels shall not be used on air entrained (exterior service) concrete.

Immediately following the removal of the forms, fins and irregular projections shall be removed from surfaces except from those that are not to be exposed or are not to be waterproofed. On surfaces, the cavities produced by form ties, honeycomb spots, broken corners or edges, and other defects, shall be thoroughly cleaned, moistened with water and carefully pointed and trued with a mortar consisting of cement and fine aggregate. The surface shall be left sound, of acceptable finish, even, and uniform in color. Mortar used in pointing shall not be more than thirty (30) minutes old. Construction and expansion joints in the completed work shall be left carefully tooled and free of mortar and concrete. The joint filler shall be left exposed for its full length with clean and true edges.

(B) **Curing.** Fresh concrete shall be protected from weather damage and mechanical injury during the curing periods. The use of a membrane-curing compound is required. Membrane curing compound shall be Type 2, Class B in accordance with AASHTO M148. The membrane-curing compound shall be applied at the rate of three hundred (300) square feet per gallon.

Membrane curing compound shall not be used when the concrete surface will be painted. The type of membrane curing compound chosen shall not permanently discolor the concrete surface. Where membrane curing compound is not used, the curing process shall be as follows:

(1) Optional curing processes described herein may be used at discretion of the City Engineer. The selected curing process shall be started as soon as possible without injury to the concrete surface. The following curing procedures may be used subject to the approval of the City Engineer:

(a) Ponding (for slabs or footings)

(b) Membrane curing compound

(c) Wet burlap, earth, or cotton mats

(d) Waterproof paper or polyethylene plastic cover

(2) Surfaces being wetted by ponding, spraying, or wetted material shall be kept completely wetted, with an excess of free water on the surface, for the first seventy-two (72) hours. After this period, for the next four (4) days, a wetting schedule shall be followed whereby the concrete is wetted on a schedule approved by the City Engineer.

(3) Surfaces being protected by waterproof paper or polyethylene plastic cover shall receive special attention during the first seventy-two (72) hours to ensure there is actually free moisture on the surface of the concrete under the waterproof surface. The engineer may require the removal of the cover and a wetting of the surface when, in his judgment, there is insufficient moisture for curing. After the first seventy-two (72) hours the cover shall be kept tightly in place for the remainder of the curing period.

9-5-8: Extreme Weather Protection

(A) **Cold Weather Concreting.** During cold weather concreting conditions, concrete construction shall be accomplished in accordance with ACI 306-R88. In all cases, the concrete supplier shall furnish concrete suitable for placement in cold weather conditions. These procedures shall be followed when concrete is placed under either of the following conditions:

(1) A period when more than three successive days the average daily outdoor temperature is below forty degrees (40°) F (the average of the highest and lowest temperatures from midnight to midnight).

(2) December, January, and February regardless of temperature.

(B) **Proper Placing and Protection of Concrete.** As a minimum, insulated blankets are required as cover for concrete placed during cold weather. It is the responsibility of the contractor, in extreme conditions, to determine if additional measures are needed to meet the temperature requirements. The following prohibitions and conditions shall be in effect during cold weather:

(1) Concrete shall not be placed on frozen subgrade.

(2) Concrete shall not be placed on or against forms covered with snow or ice.

(3) Insulating materials shall be available and easily accessible.

(4) Avoid direct contact of fresh concrete with carbon dioxide emitted from poorly ventilated space heaters.

(5) Always use ASTM-approved curing compounds to insure proper curing and to prevent rapid drying and loss of moisture.

(6) Maintain concrete at fifty-five degrees (55°) F for three days (two (2) days if admixture is used). If the temperature requirements are not met, the concrete must continue to be protected until twice the deficiency in degree-days is met. For example, if the concrete was maintained at an average temperature for the three days of fifty degrees (50°) F (five degrees (5°) below the requirement), the concrete will need to be maintained at sixty-five degrees (65°) (twice the deficiency) for an additional three days, or at fifty-five degrees (55°)for an additional six (6) days.

In practice, if the contractor is unable to maintain fifty-five degrees (55°) F, he may also be unable to provide the increased protection requirement, three days after placement, without the use of heat generating equipment. Failure to provide the additional protection required, after first failing to provide the three days at fifty-five degrees (55°) F, shall be grounds for rejecting the concrete.

(7) If the concrete is found to have frozen in the first twenty-four (24) hours, it shall be rejected.

(C) **Hot Weather Concreting.** Except by written authorization, concrete shall not be placed if the temperature of the plastic concrete cannot be maintained at ninety degrees (90º) Fahrenheit or lower. The placement of concrete in hot weather shall comply with ACI 305.

9-5-9: Testing, Final Inspection, and Acceptance

(A) **General.** The requirements of this section shall apply to testing services for concrete curb and gutter, sidewalk, pavement, slope paving, retaining walls, structures, and for miscellaneous concrete testing.

Concrete materials and operations shall be tested as directed by the City Engineer and in this specification. The required testing services shall be performed by a testing agency approved by the City Engineer, and testing agencies shall meet the requirements of ASTM E329.

A representative of the testing agency shall inspect, sample, and test material and production of concrete as required by the City Engineer at the Responsible Party's expense. When it appears that any material furnished or work performed by the Responsible Party fails to meet minimum specification requirements, the testing agency shall report the deficiency to the City Engineer and the Responsible Party.

The testing agency shall report test and inspection results to the City Engineer and Responsible Party immediately after they are performed. Test reports shall include the exact location of the work at which the batch represented by a test was deposited. The report of the strength test shall include detailed information on storage and curing of specimen prior to testing, the project number, and the location of the concrete (curb, manhole, inlet, sidewalk, paving, etc.). Test reports shall bear the seal and signature of a PE registered in the State of Colorado and competent in the field of concrete testing. Reports not properly certified shall not be accepted.

The testing agency or its representative is not authorized to revoke, alter, relax, enlarge or release any requirements of these Standards and Specifications, nor approve or accept any portion of the work.

(B) The acceptance of all concrete improvements by the City will be based on the following.

(1) Submittal of all required test results certified by the Engineer or a qualified independent laboratory.

(2) Submittal of a copy of the daily inspection reports prepared by the Engineer or his representative.

(3) Passing a final inspection of the work by the City Engineer or his representative.

(4) Submittal of two sets of “As-Built” construction drawings on twenty-four by thirty-six inch (24”x 36”) paper. All “As-Built” drawings shall be certified by a Professional Engineer currently licensed by the State of Colorado and shall state the name of the Contractor. “As-Built” drawings shall also be submitted as an electronic AutoCAD file in accordance with the City of Montrose submittal standards in Section 9-1-2.

(5) The Responsible Party shall guarantee all portions of the work for a period of two years after completion and initial acceptance against defective workmanship and materials and shall keep the work in good repair. The City Engineer possesses sole authority to require the repair or replacement of dedicated public improvements during the warranty period.

9-5-10: Flowcrete/Flowfill Specifications.

Flow-fill shall meet the requirements of Section 206.02(a) of the current *CDOT Standard Specifications for Road and Bridge Construction.* Flow fill may be made from different ingredients and/or at different proportions than those specified in the CDOT Standard Specifications when approved by the City Engineer.

9-5-11: Concrete Details

C-01 Monolithic Curb, Gutter And Sidewalk

C-02 Drive Over Curb, Gutter And Sidewalk (Res. Only)

C-03 Drive Over Curb And Gutter (Res. Only)

C-04 Curb And Gutter

C-05 Joint Details For Curb, Gutter And Sidewalk

C-06 Driveway Section-Detached Sidewalk, Gutter And Curb

C-07 Driveway Section-Monolithic Curb, Gutter And Sidewalk

C-08 Driveway Section-Monolithic Curb, Gutter And Sidewalk

C-09 Sections A And B

C-10 Sections C And D

C-11 V-Pan Detail And Contraction Joint Reinforcement

C-12 Curb Ramp(S) At Intersection Sidewalk

C-13 Curb Return Joints-20’ Radius Face Of Curb

C-14 Curb Return Joints-25’ Radius Face Of Curb

C-15 Curb Return Joints-30’ Radius Face Of Curb

C-16 Curb Return Joints-35’ Radius Face Of Curb

C-17 Sections G And H

C-18 Alternate Ramp Without Landing

C-19 Ramp Profile

C-20 Ramp Detectable Warning

C-21 Standard Accessible Parking Stall

C-22 Radii And Right-Of-Way Width At Intersection Corner

C-23 Asphalt Patching

C-24 Joint Seal

C-25 Joint Detail For Concrete Pavement

C-26 Longitudinal Joints For Concrete Pavement

C-27 Mail Box Installation

C-28 Patch In Concrete Pavement

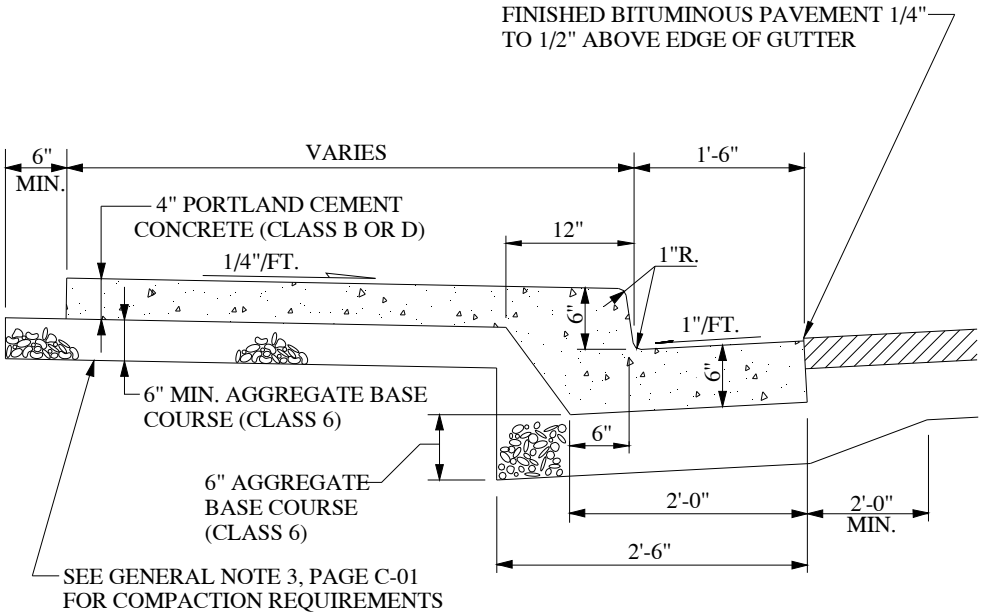

Z:\Specifications\Engineering Specifications\Concrete Standards\C-01_2011.dwg

MONOLITHIC CURB, GUTTER AND SIDEWALK				
MONTROSE	ENGINEERING DEPARTMENT	STANDARD CONCRETE DETAILS	APPROVED: JRH REV: JAN 2011 DRAWN BY: RLW	PAGE C-01

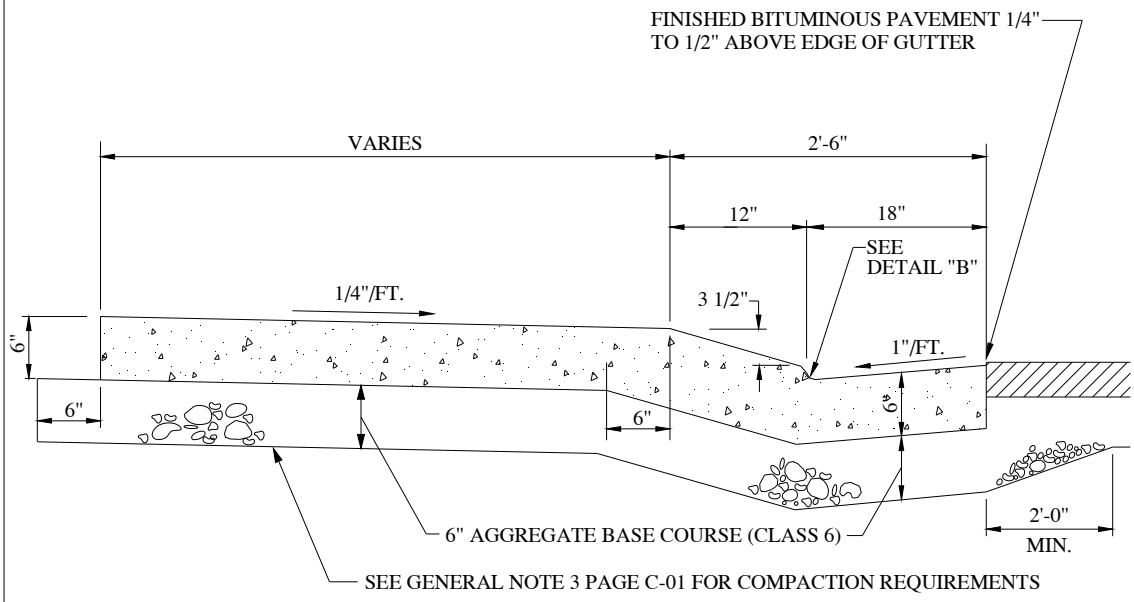

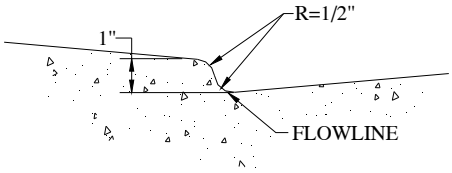

DETAIL "B"

Z:\Specifications\Engineering Specifications\Concrete Standards\C-02_2011.dwg

DRIVE OVER CURB, GUTTER AND SIDEWALK (RES. ONLY)				
MONTROSE	ENGINEERING DEPARTMENT	STANDARD CONCRETE DETAILS	APPROVED: JRH REV: JAN 2011 DRAWN BY: RLW	PAGE C-02

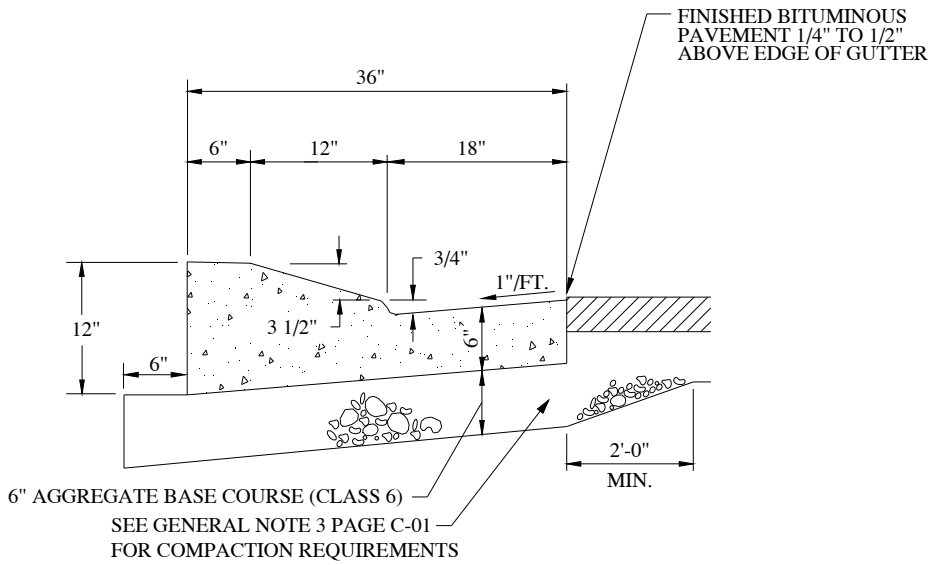

Z:\Specifications\Engineering Specifications\Concrete Standards\C-03_2011.dwg

DRIVE OVER CURB AND GUTTER (RES. ONLY)

MONTROSE	ENGINEERING DEPARTMENT	STANDARD CONCRETE DETAILS	APPROVED: JRH REV: DEC 2010 DRAWN BY: RLW	PAGE C-03

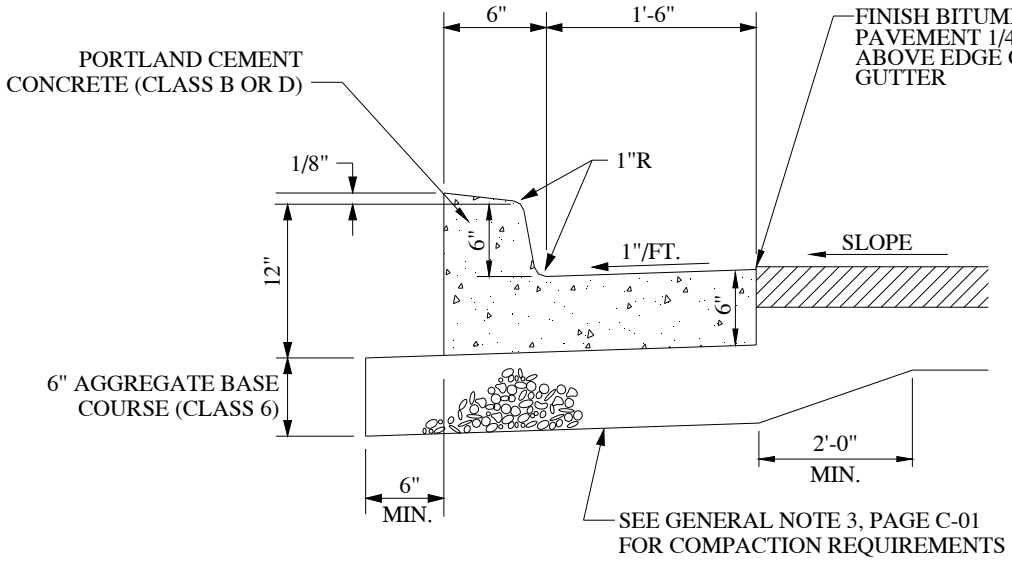

STANDARD CURB AND GUTTER

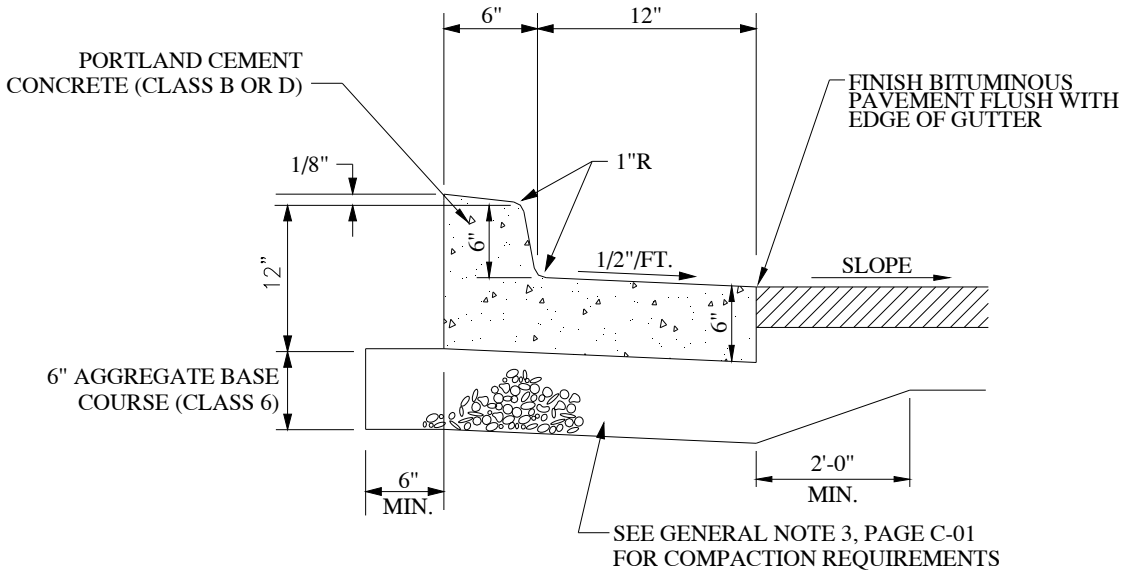

CURB WITH SPILL GUTTER

(FOR USE ON RAISED MEDIANS ONLY)

Z:\Specifications\Engineering Specifications\Concrete Standards\C-04_2011.dwg

CURB AND GUTTER

MONTROSE	ENGINEERING DEPARTMENT	STANDARD CONCRETE DETAILS	APPROVED: JRH REV: JAN 2011 DRAWN BY: RLW	PAGE C-04

EXPANSION JOINT SPACING

HAND FORMED FLATWORK = 100' MAX

SLIP FORMED FLATWORK = 200' MAX

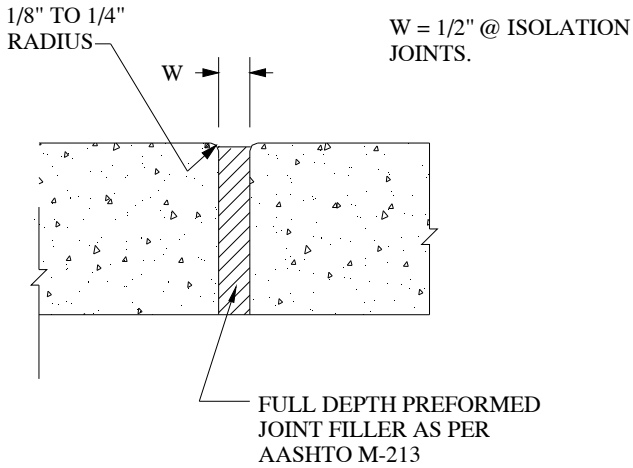

UNDOWELED EXPANSION OR ISOLATION JOINT

CONTRACTION JOINT SPACING
5' MINIMUM
10' STANDARD
10' MAXIMUM

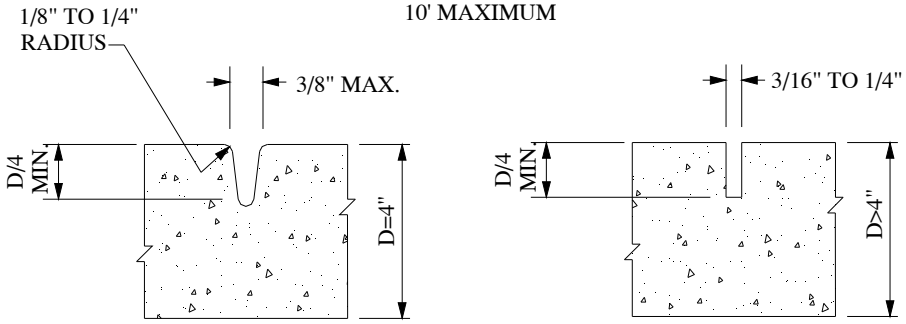

TOOLED JOINT

SAWED JOINT

TRANSVERSE CONTROL JOINTS

JOINT DETAILS FOR CURB, GUTTER AND SIDEWALK

MONTROSE	ENGINEERING DEPARTMENT	STANDARD CONCRETE DETAILS	APPROVED: JRH REV: JAN 2011 DRAWN BY: RLW	PAGE C-05

Z:\Specifications\Engineering Specifications\Concrete Standards\C-05_2011.dwg

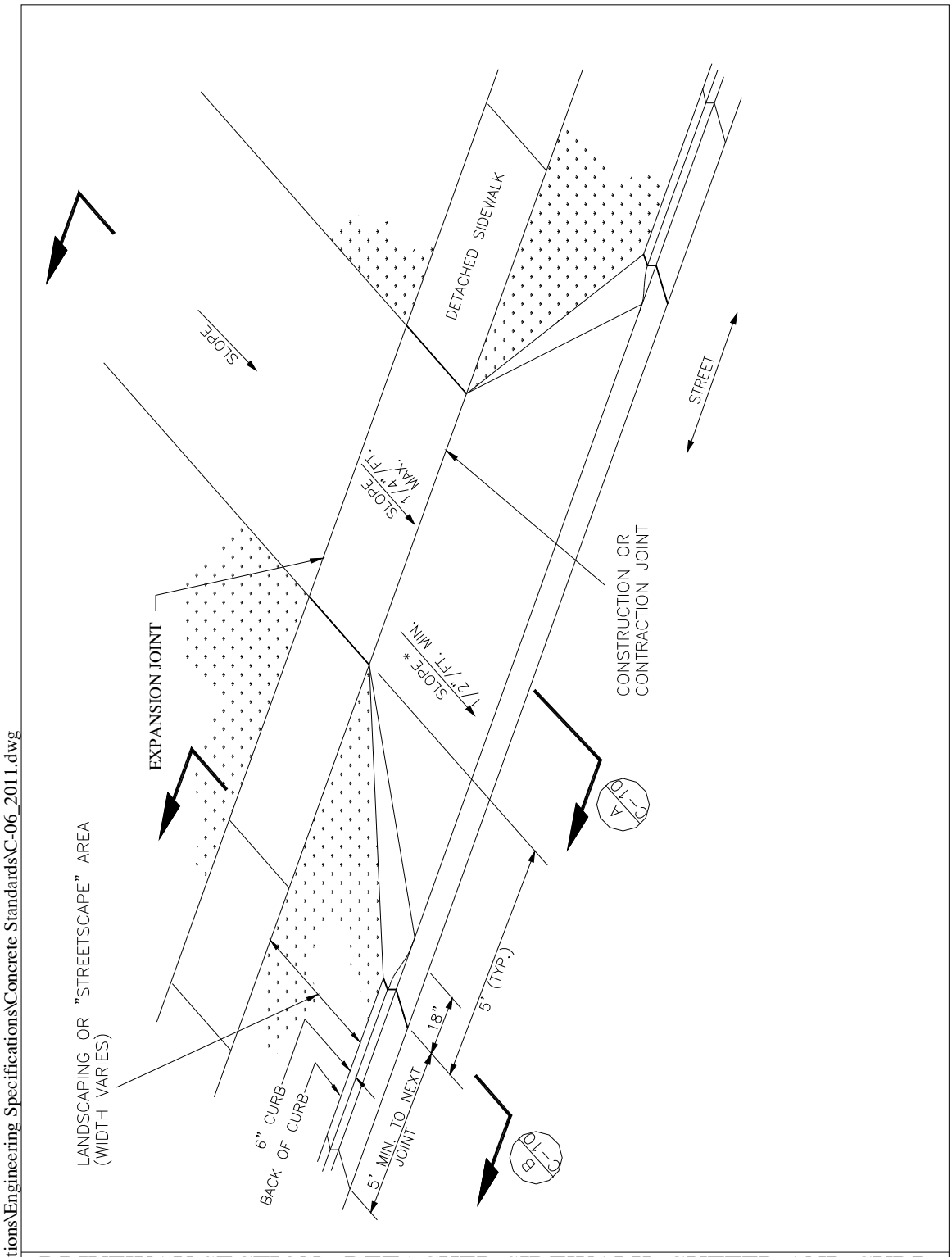

Z:\Specifications\Engineering Specifications\Concrete Standards\C-06_2011.dwg

DRIVEWAY SECTION - DETACHED SIDEWALK, GUTTER AND CURB				
MONTROSE	ENGINEERING DEPARTMENT	STANDARD CONCRETE DETAILS	APPROVED: JRH REV: JAN 2011 DRAWN BY: RLW	PAGE C-06

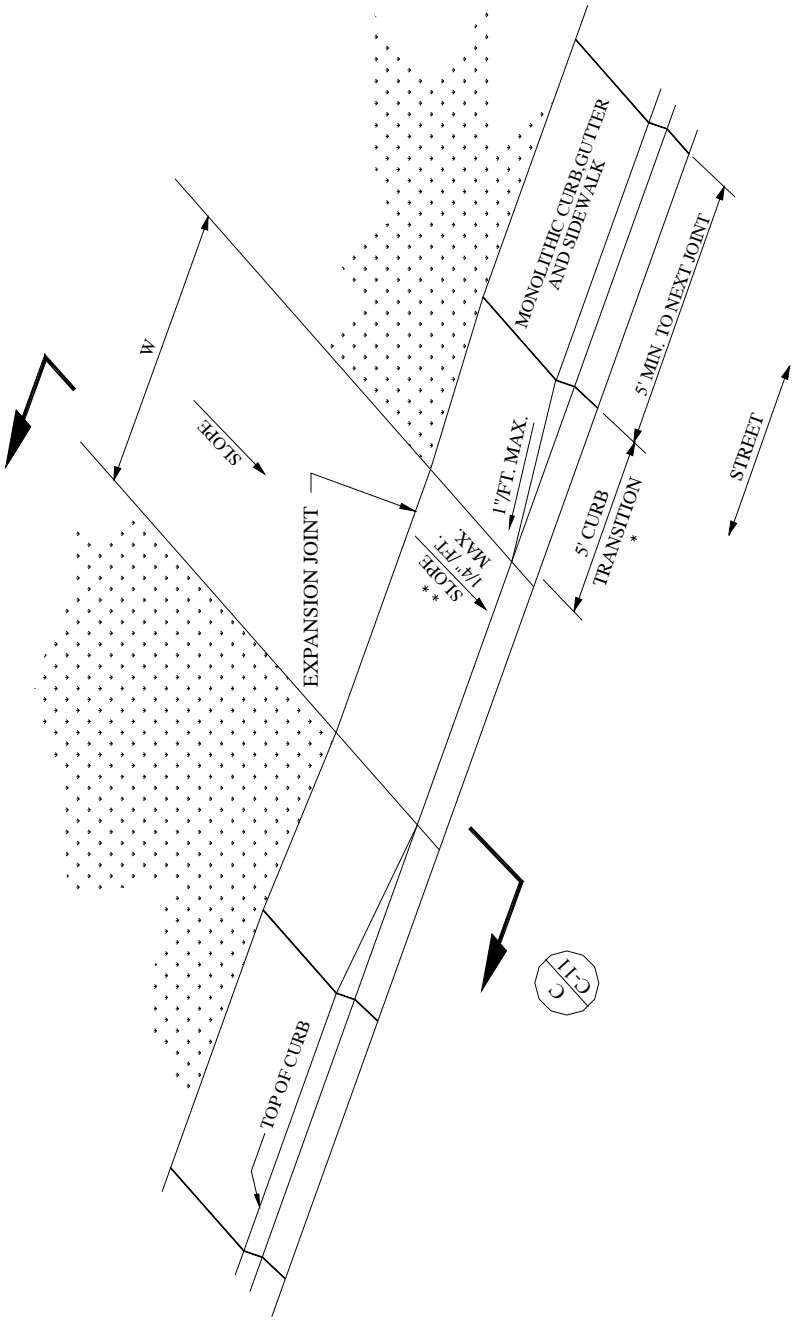

* SIDEWALK SHALL BE SAME THICKNESS AS DRIVEWAY IN CURB TRANSITION SECTIONS.

** CROSS SLOPE SHALL NOT EXCEED 1/4" / FT.

Z:\Specifications\Engineering Specifications\Concrete Standards\C-07_2011.dwg

DRIVEWAY SECTION - MONOLITHIC CURB, GUTTER AND SIDEWALK				
MONTROSE	ENGINEERING DEPARTMENT	STANDARD CONCRETE DETAILS	APPROVED: JRH REV: JAN 2011 DRAWN BY: RLW	PAGE C-07

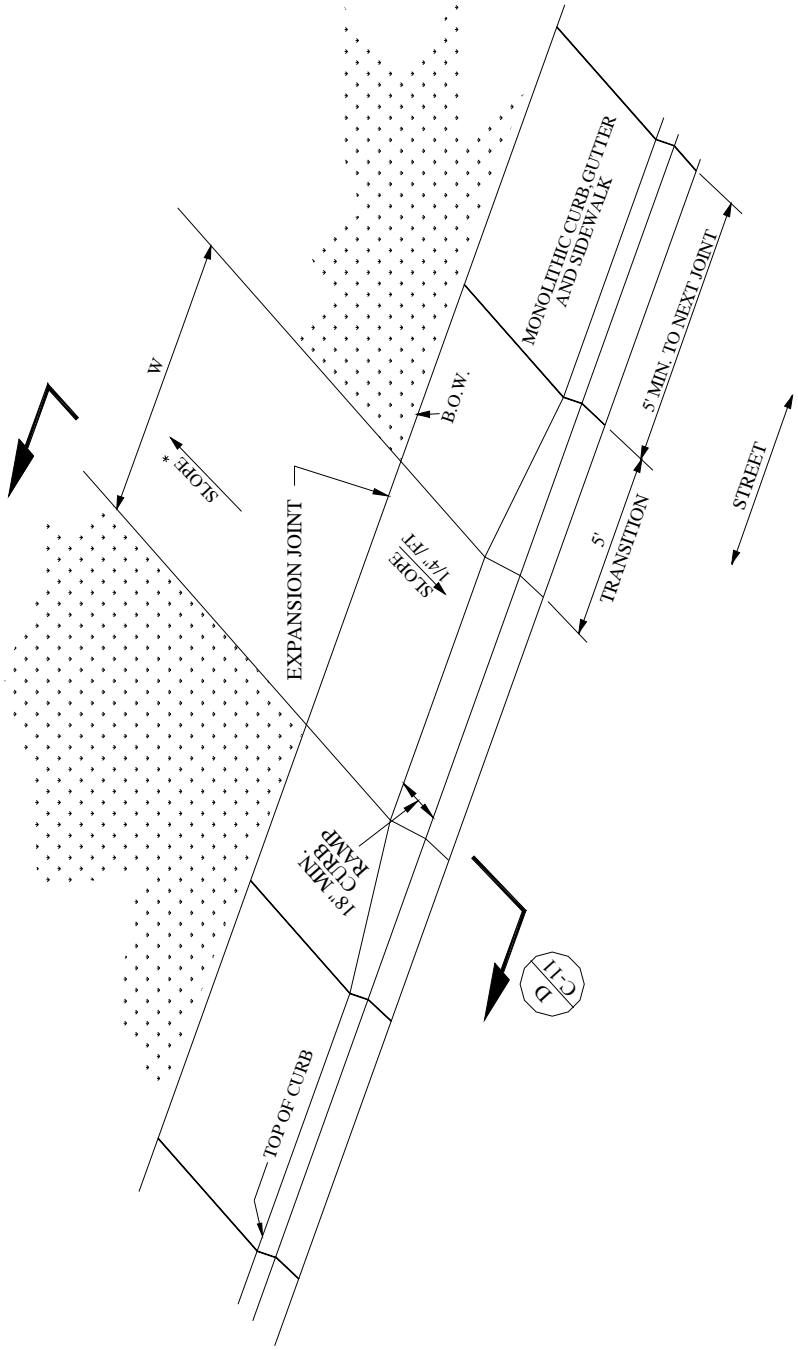

* THIS DRIVEWAY SECTION IS RECOMMENDED WHERE THE DRIVEWAY IS LOWER THAN THE CURB ELEVATION. THE BACK OF SIDEWALK IS NOT DEPRESSED THROUGH THE DRIVEWAY, THEREFORE, THE DRAINAGE CAPACITY IN THE STREET IS MAINTAINED.

Z:\Specifications\Engineering Specifications\Concrete Standards\C-08_2011.dwg

DRIVEWAY SECTIONS-MONOLITHIC CURB, GUTTER AND SIDEWALK				
MONTROSE	ENGINEERING DEPARTMENT	STANDARD CONCRETE DETAILS	APPROVED: JRH REV: JAN 2011 DRAWN BY: RLW	PAGE C-08

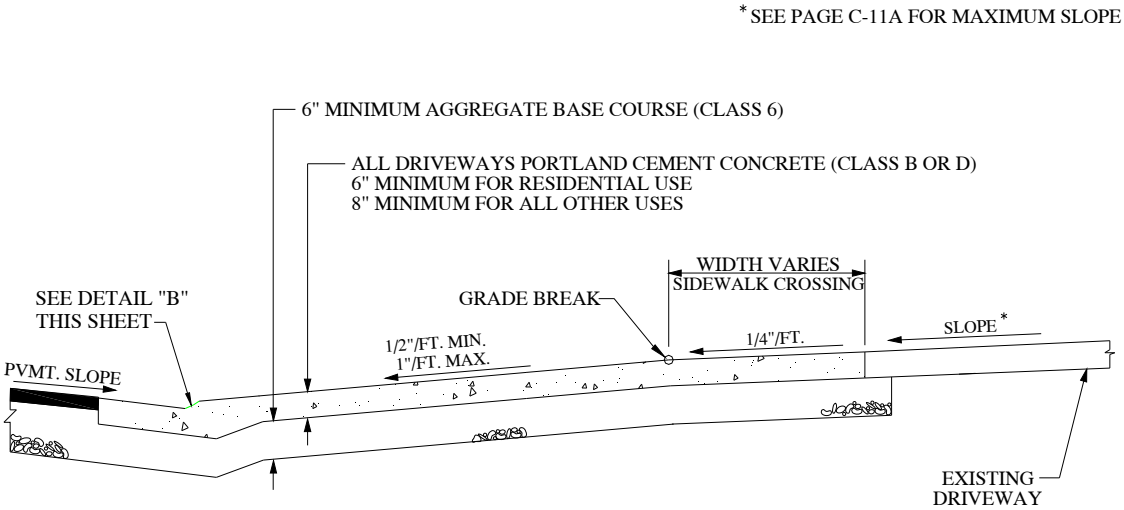

SECTION A / C-07

NOTE: MINIMUM CONCRETE AND AGGREGATE THICKNESS SHOWN ALSO APPLY TO MONOLITHIC C.G. & SW.

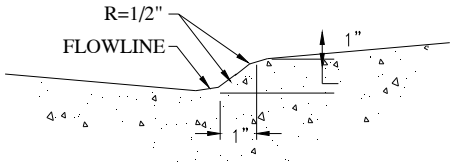

DETAIL "B"

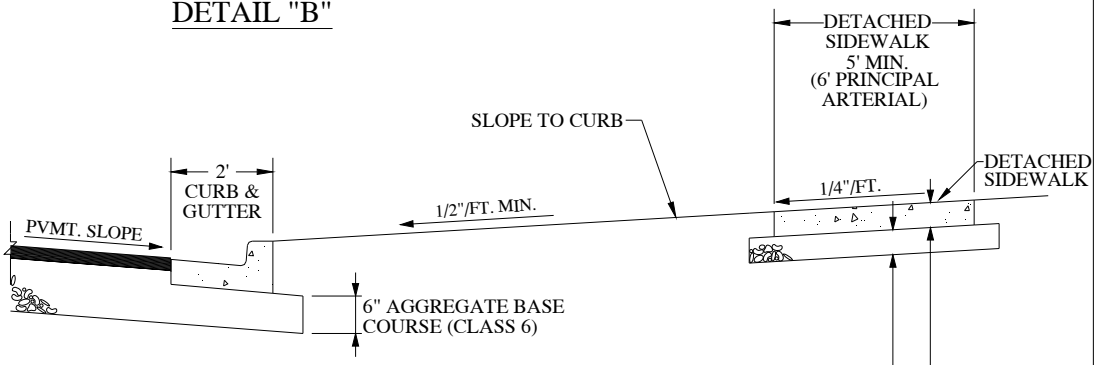

SECTION B / C-07

6" AGGREGATE BASE COURSE (CLASS 6)

4" PORTLAND CEMENT CONCRETE (CLASS B OR D)

NOTE: SIDEWALK MAY BE BELOW CURB ELEVATION AND/OR SLOPE AWAY FROM CURB WHERE APPROVED BY THE CITY ENGINEER.

Z:\Specifications\Engineering Specifications\Concrete Standards\C-09_2011.dwg

SECTIONS A AND B				
MONTROSE	ENGINEERING DEPARTMENT	STANDARD CONCRETE DETAILS	APPROVED: JRH REV: JAN 2011 DRAWN BY: RLW	PAGE C-09

* CROSS SLOPE SHALL NOT EXCEED 1/4" /FT.

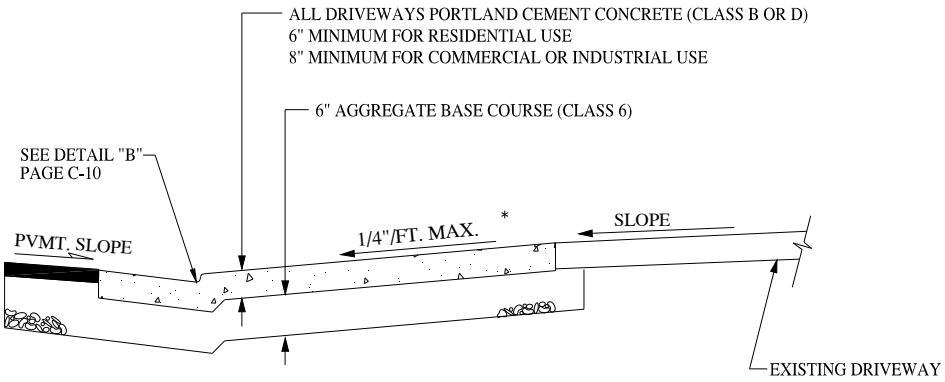

SECTION C / C-08

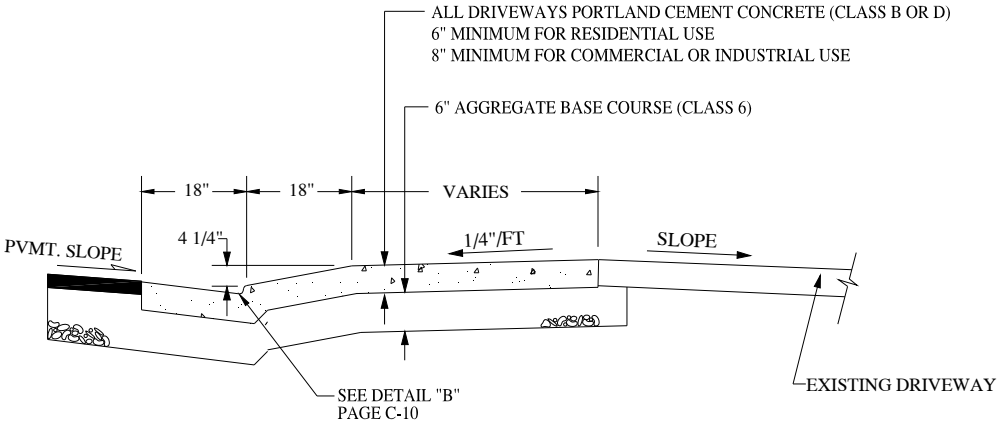

SECTION D / C-09

Z:\Specifications\Engineering Specifications\Concrete Standards\C-10_2011.dwg

SECTIONS C AND D

MONTROSE	ENGINEERING DEPARTMENT	STANDARD CONCRETE DETAILS	APPROVED: JRH REV: JAN 2011 DRAWN BY: RLW	PAGE C-10

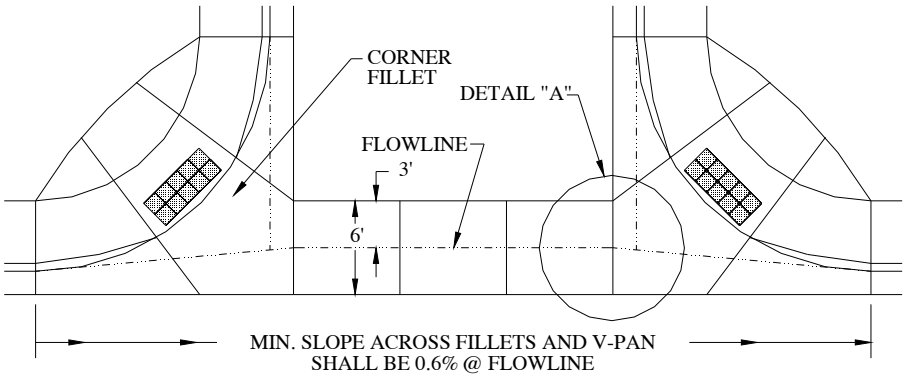

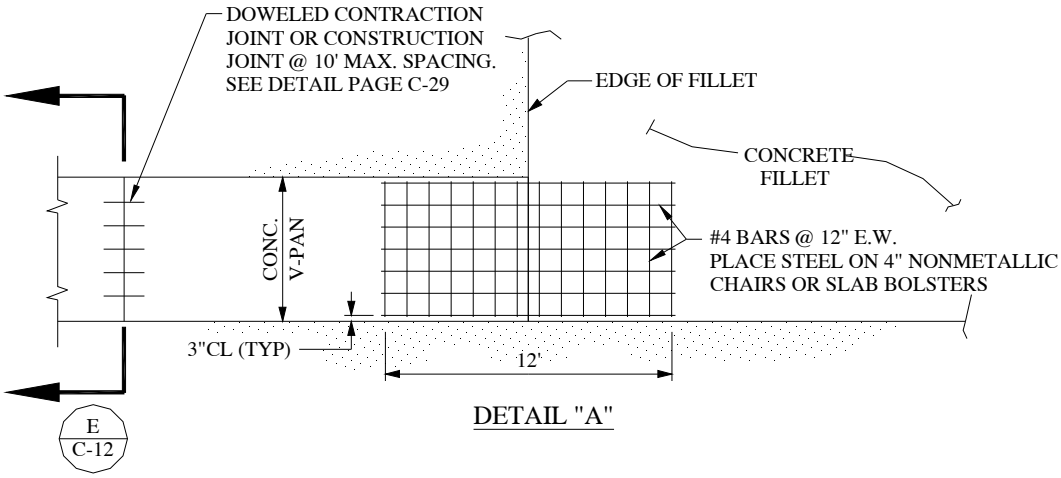

DETAIL "A"

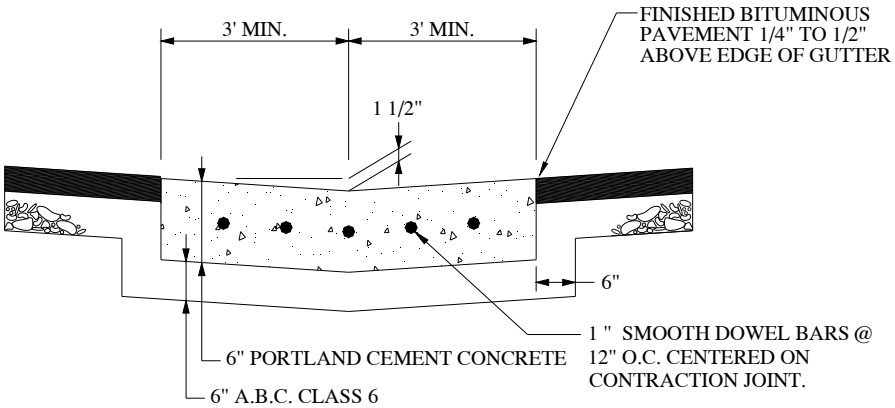

SECTION E C-12

Z:\Specifications\Engineering Specifications\Concrete Standards\C-11_2011.dwg

V-PAN DETAIL AND CONTRACTION JOINT REINFORCEMENT				
MONTROSE	ENGINEERING DEPARTMENT	STANDARD CONCRETE DETAILS	APPROVED: JRH REV: JAN 2011 DRAWN BY: RLW	PAGE C-11

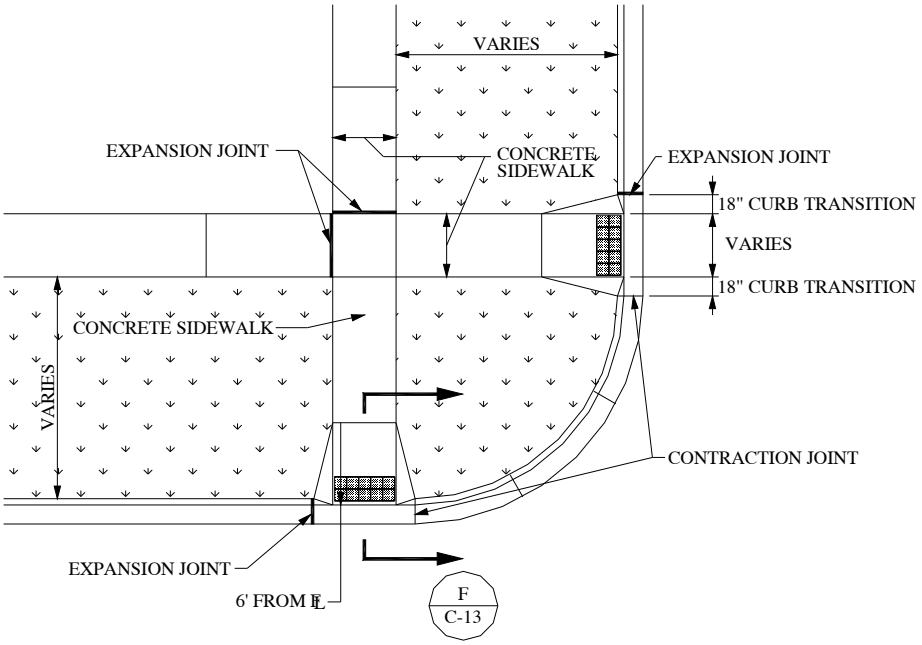

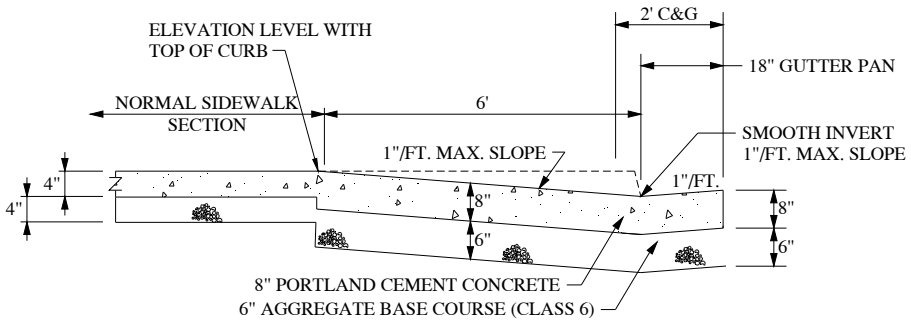

SECTION F C-13

Z:\Specifications\Engineering Specifications\Concrete Standards\C-12_2011.dwg

CURB RAMP(S) AT INTERSECTION SIDEWALK				
MONTROSE	ENGINEERING DEPARTMENT	STANDARD CONCRETE DETAILS	APPROVED: JRH REV: JAN 2011 DRAWN BY: RLW	PAGE C-12

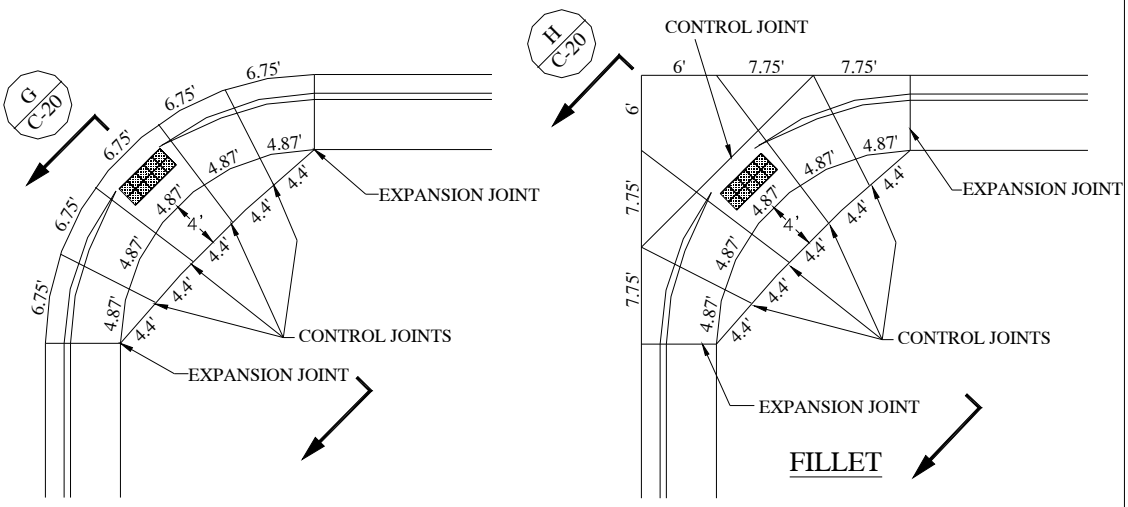

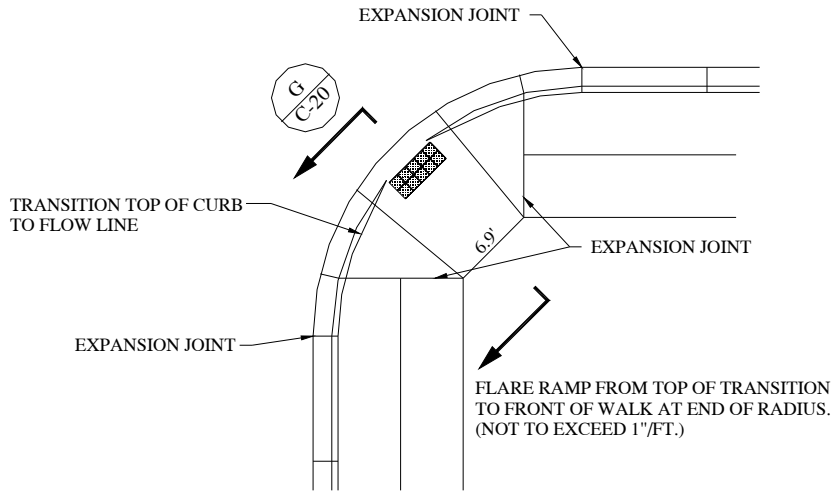

DETACHED SIDEWALK

Z:\Specifications\Engineering Specifications\Concrete Standards\C-13_2011.dwg

CURB RETURN JOINTS-20' RADIUS FACE OF CURB				
MONTROSE	ENGINEERING DEPARTMENT	STANDARD CONCRETE DETAILS	APPROVED: JRH REV: JAN 2011 DRAWN BY: RLW	PAGE C-13

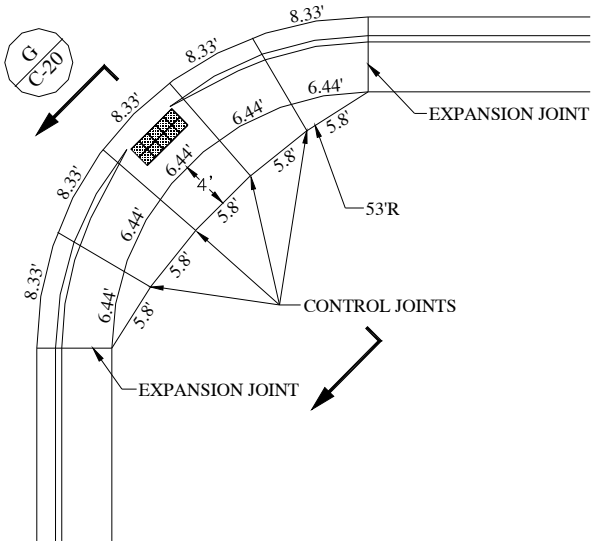

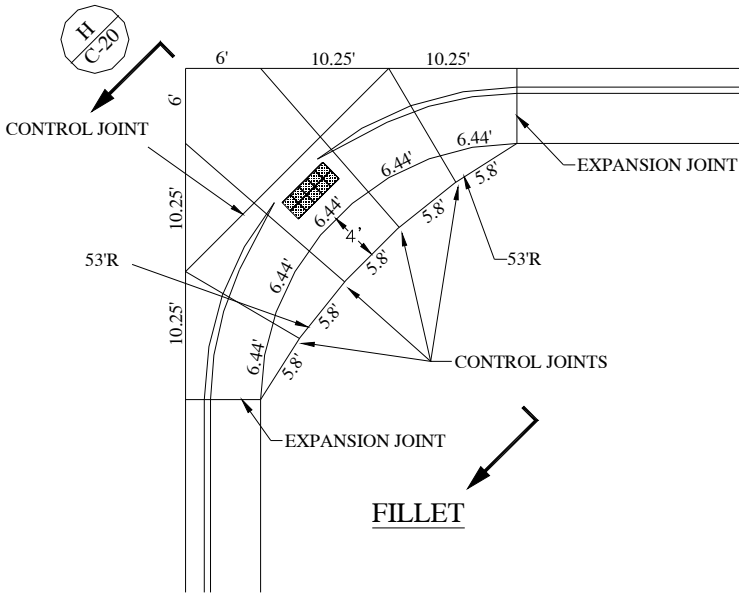

Z:\Specifications\Engineering Specifications\Concrete Standards\C-14_2011.dwg

CURB RETURN JOINTS-25' RADIUS FACE OF CURB				
MONTROSE	ENGINEERING DEPARTMENT	STANDARD CONCRETE DETAILS	APPROVED: JRH REV: JAN 2011 DRAWN BY: RLW	PAGE C-14

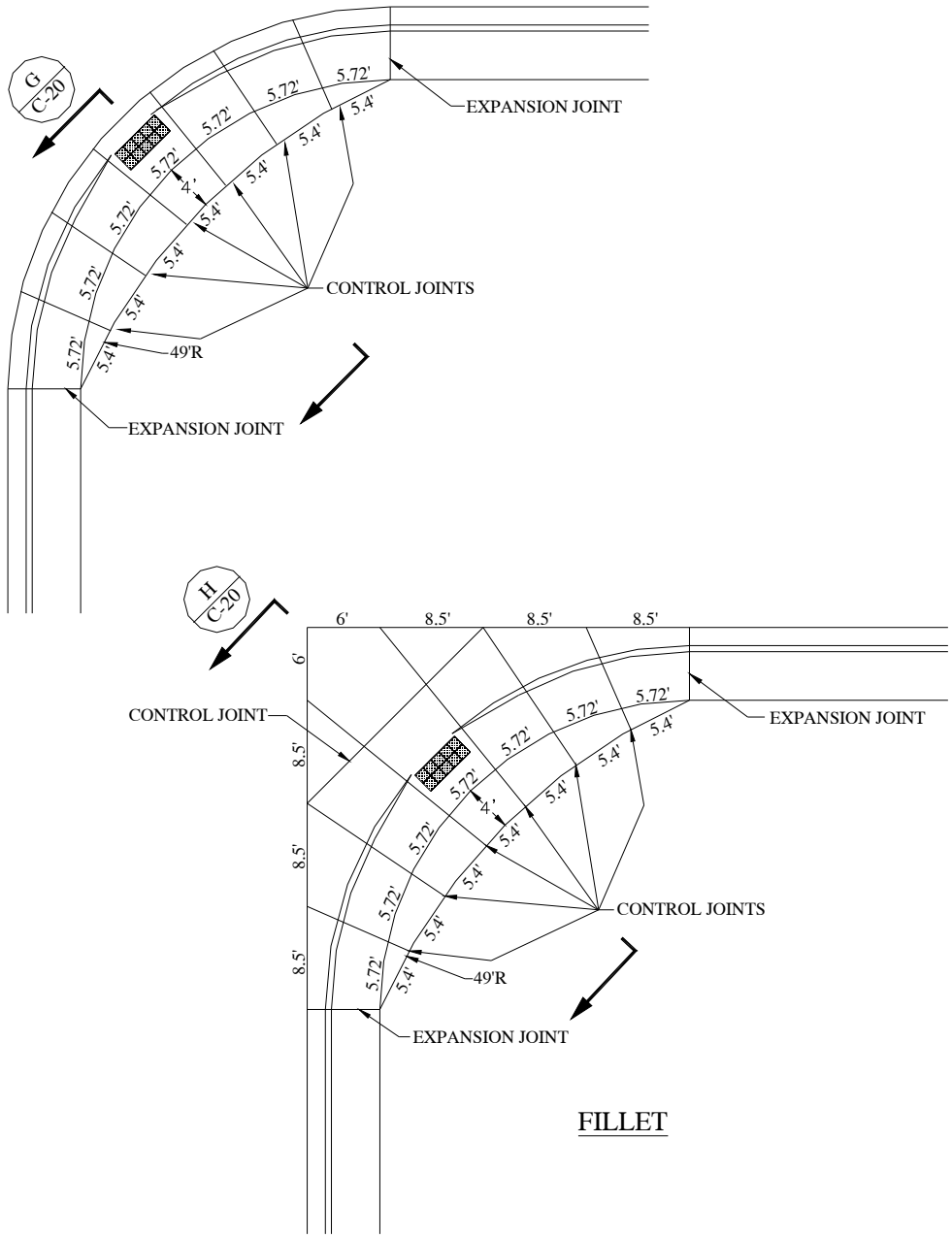

Z:\Specifications\Engineering Specifications\Concrete Standards\C-15_2011.dwg

CURB RETURN JOINTS-30' RADIUS FACE OF CURB				
MONTROSE	ENGINEERING DEPARTMENT	STANDARD CONCRETE DETAILS	APPROVED: JRH REV: JAN 2011 DRAWN BY: RLW	PAGE C-15

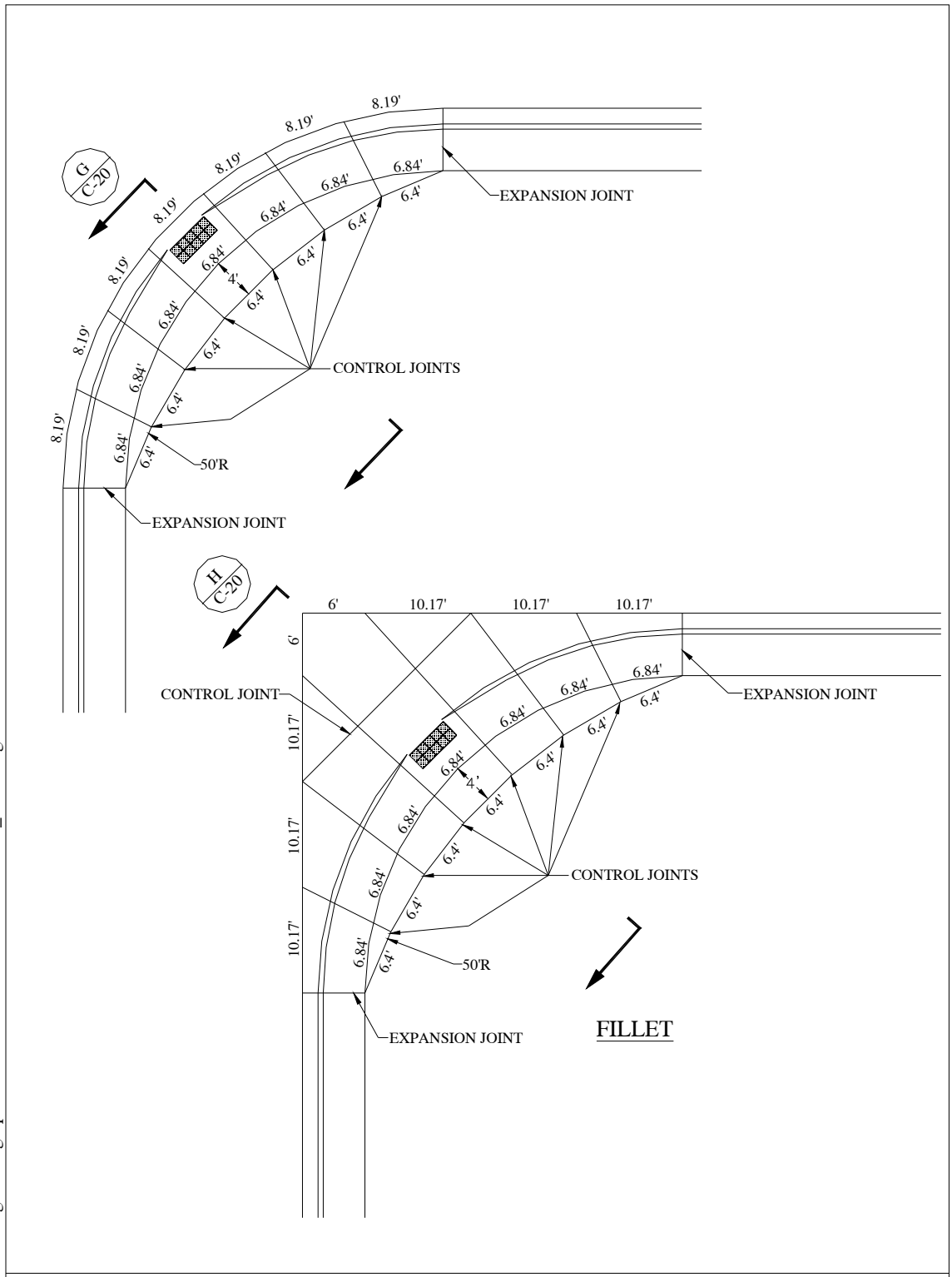

Z:\Specifications\Engineering Specifications\Concrete Standards\C-16_2011.dwg

CURB RETURN JOINTS-35' RADIUS FACE OF CURB				
MONTROSE	ENGINEERING DEPARTMENT	STANDARD CONCRETE DETAILS	APPROVED: JRH REV: JAN 2011 DRAWN BY: RLW	PAGE C-16

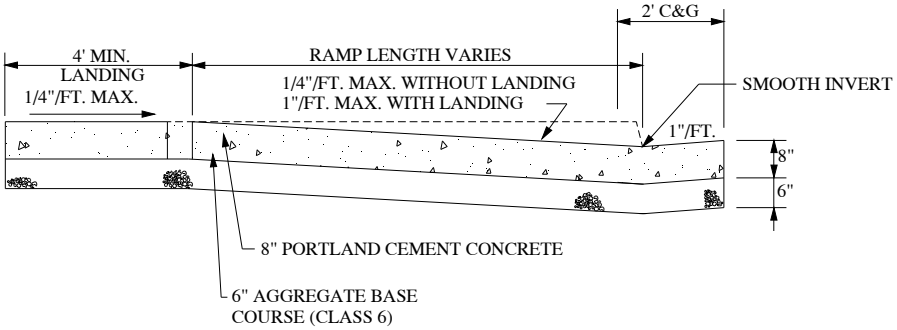

SECTION G C-16 G C-17 G C-18 G C-19

(WITHOUT FILLET)

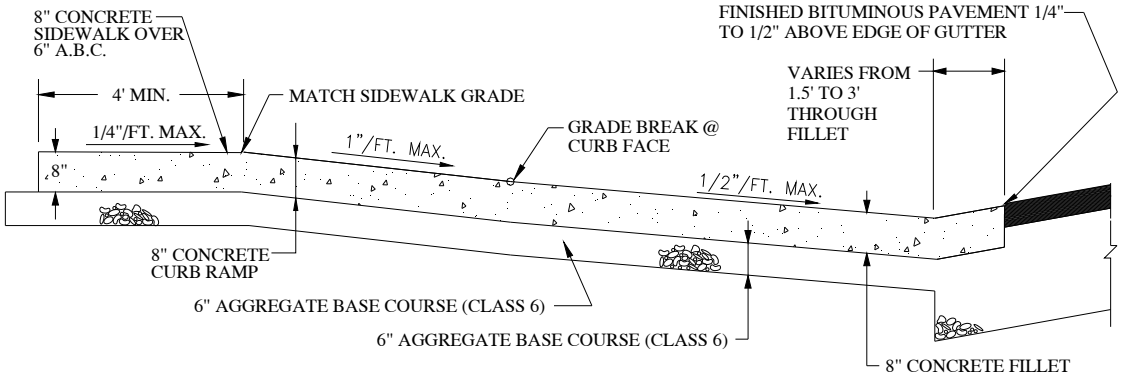

SECTION H C-16 H C-17 H C-18 H C-19

(WITH FILLET)

Z:\Specifications\Engineering Specifications\Concrete Standards\C-17_2011.dwg

SECTIONS G AND H				
MONTROSE	ENGINEERING DEPARTMENT	STANDARD CONCRETE DETAILS	APPROVED: JRH REV: JAN 2011 DRAWN BY: RJW	PAGE C-17

NOTE:
FOR JOINT DETAILS, SEE
SHEETS C-13 THROUGH C-19

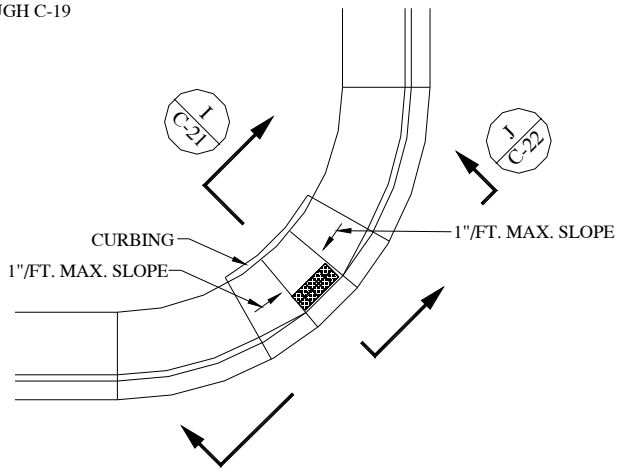

WITHOUT LANDING BEHIND RAMP
(FOR RETROFIT ON EXISTING STREETS ONLY)

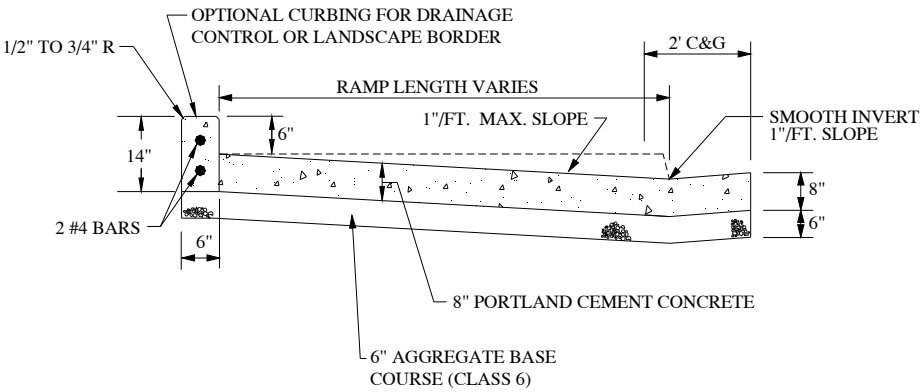

SECTION I/C-21

Z:\Specifications\Engineering Specifications\Concrete Standards\C-18_2011.dwg

ALTERNATE RAMP WITHOUT LANDING

MONTROSE	ENGINEERING DEPARTMENT	STANDARD CONCRETE DETAILS	APPROVED: JRH REV: JAN 2011 DRAWN BY: RLW	PAGE C-18

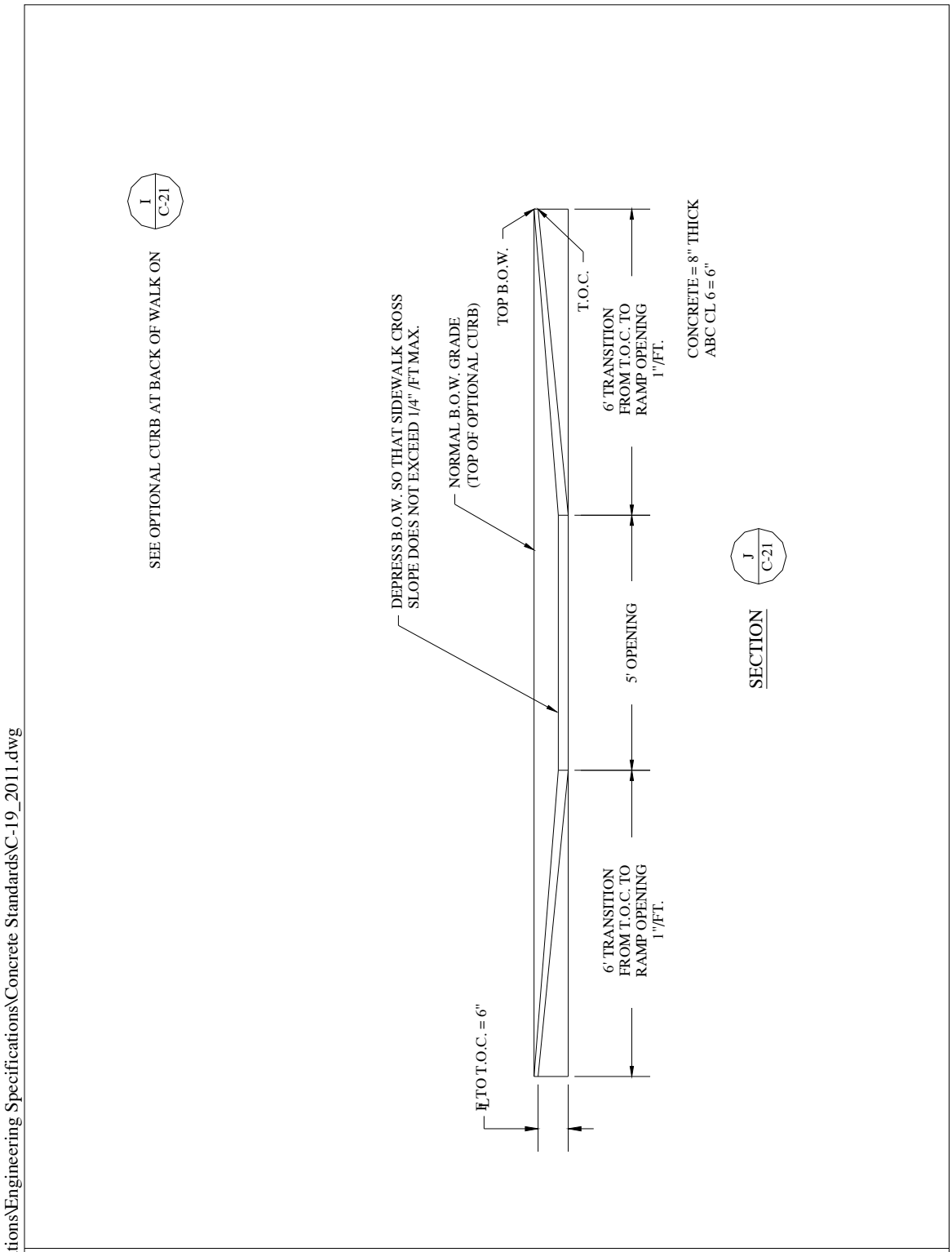

Z:\Specifications\Engineering Specifications\Concrete Standards\C-19_2011.dwg

RAMP PROFILE				
MONTROSE	ENGINEERING DEPARTMENT	STANDARD CONCRETE DETAILS	APPROVED: JRH REV: JAN 2011 DRAWN BY: RJW	PAGE C-19

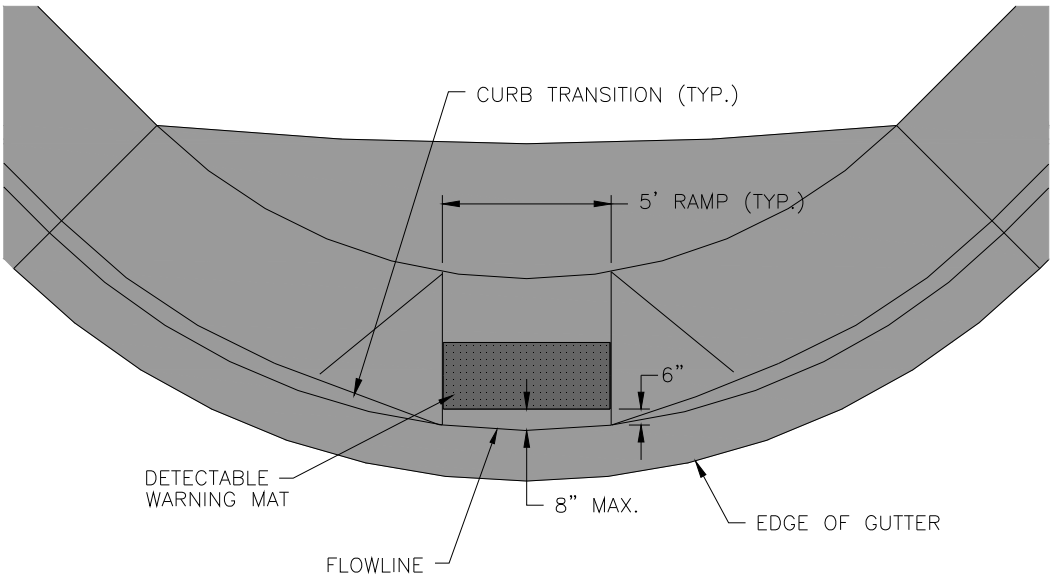

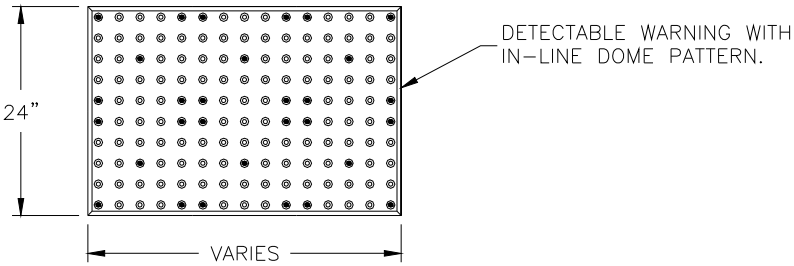

DETECTABLE WARNING: THE DETECTABLE WARNING SHALL BE ADA SOLUTIONS, INC REPLACEABLE COMPOSITE (WET-SET) TACTILE TILES (BRICK RED), OR APPROVED SUBSTITUTE. THE DETECTABLE WARNING SHALL EXTEND THE FULL WIDTH OF THE RAMP (EXCLUDING CURB TRANSITIONS) AND SHALL BE INSTALLED IN ACCORDANCE WITH THE MANUFACTURERS INSTRUCTIONS.

Z:\Specifications\Engineering Specifications\Concrete Standards\C-20_2011.dwg

RAMP DETECTABLE WARNING				
MONTROSE	ENGINEERING DEPARTMENT	STANDARD CONCRETE DETAILS	APPROVED: JRH REV: JAN 2011 DRAWN BY: RLW	PAGE C-20

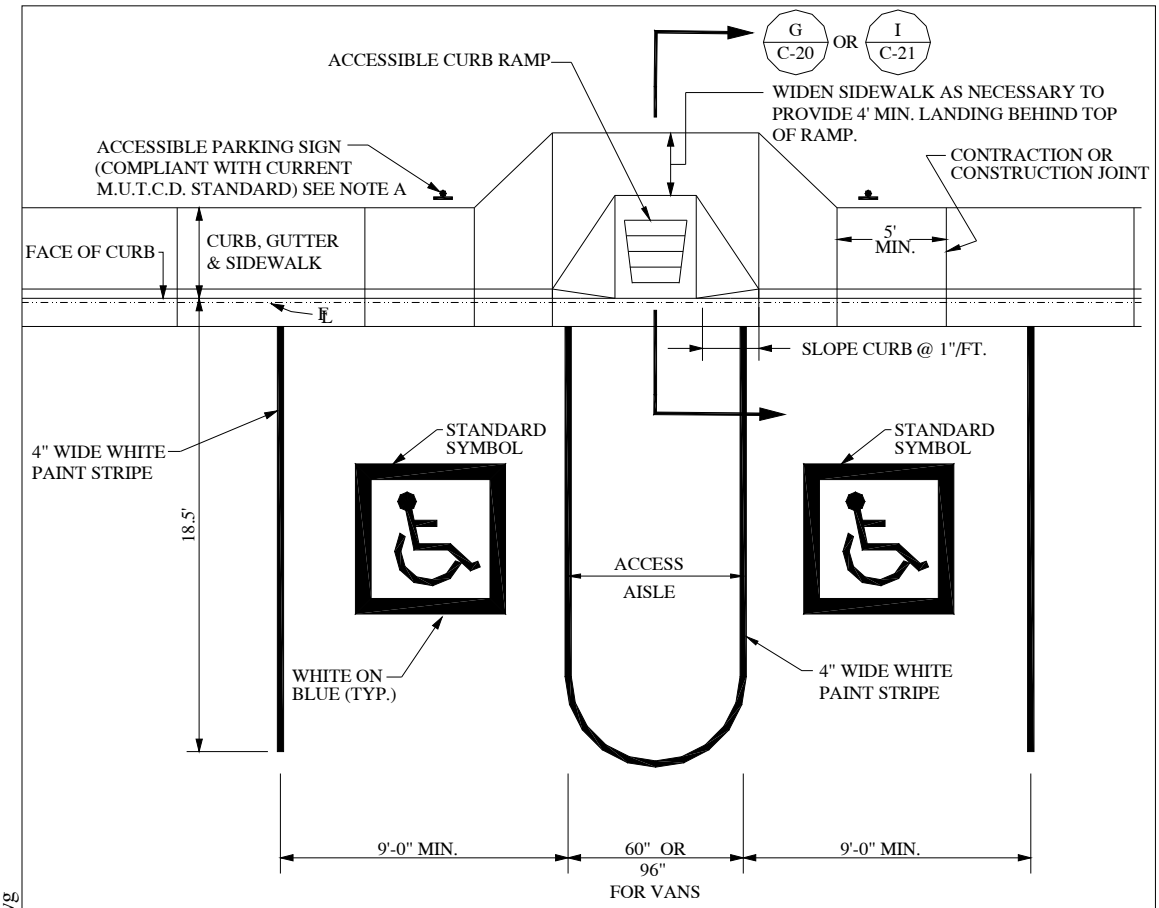

NOTES:

A. ACCESSIBLE PARKING SPACES SHALL BE DESIGNATED AS RESERVED FOR THE DISABLED BY A SIGN SHOWING THE SYMBOL OF ACCESSIBILITY (SEE UFAS 4.30.5). SPACES COMPLYING WITH NOTE B SHALL HAVE AN ADDITIONAL SIGN "VAN ACCESSIBLE" MOUNTED BELOW THE SYMBOL OF ACCESSIBILITY. SUCH SIGNS SHALL BE MOUNTED SO THEY CANNOT BE OBSCURED BY A VEHICLE PARKED IN THE SPACE.

B. ONE IN EVERY EIGHT ACCESSIBLE SPACES, BUT NOT LESS THAN ONE, SHALL BE SERVED BY AN ACCESS AISLE 9'-0" WIDE AND SHALL BE DESIGNATED "VAN ACCESSIBLE" AS SPECIFIED BY NOTE A.

C. PARKING ACCESS AISLES SHALL BE PART OF AN ACCESS ROUTE TO THE BUILDING OR FACILITY ENTRANCE. TWO ACCESSIBLE PARKING SPACES MAY SHARE A COMMON ACCESS AISLE. PARKING SPACES AND ACCESS AISLES SHALL BE LEVEL WITH SURFACE SLOPES NOT EXCEEDING 1:50 IN ALL DIRECTIONS.

D. ACCESSIBLE CURB RAMPS AT INTERSECTIONS SHALL BE ALIGNED WITH STREET CROSSWALKS.

E. THE MAXIMUM LONGITUDINAL SLOPE ALLOWED ON ANY CURB RAMP SHALL BE 1"/FT. (8.33%). THE MAXIMUM CROSS SLOPE ALLOWED ON ANY WALKING ROUTE IS 1/4"/FT.

F. THE SURFACE OF ALL ACCESSIBLE RAMPS AND FLARED SIDES SHALL BE FINISHED WITH A COURSE BROOMED TEXTURE PERPENDICULAR TO THE SLOPE OF THE RAMP.

G. ALL HANDICAP RAMPS, PARKING STALLS AND LANDINGS, SHALL CONFORM TO THE UNIFORM FEDERAL ACCESSIBILITY STANDARDS (UFAS) LATEST EDITION.

Z:\Specifications\Engineering Specifications\Concrete Standards\C-21_2011.dwg

STANDARD ACCESSIBLE PARKING STALL

MONTROSE	ENGINEERING DEPARTMENT	STANDARD CONCRETE DETAILS	APPROVED: JRH REV: JAN 2011 DRAWN BY: RLW	PAGE C-21

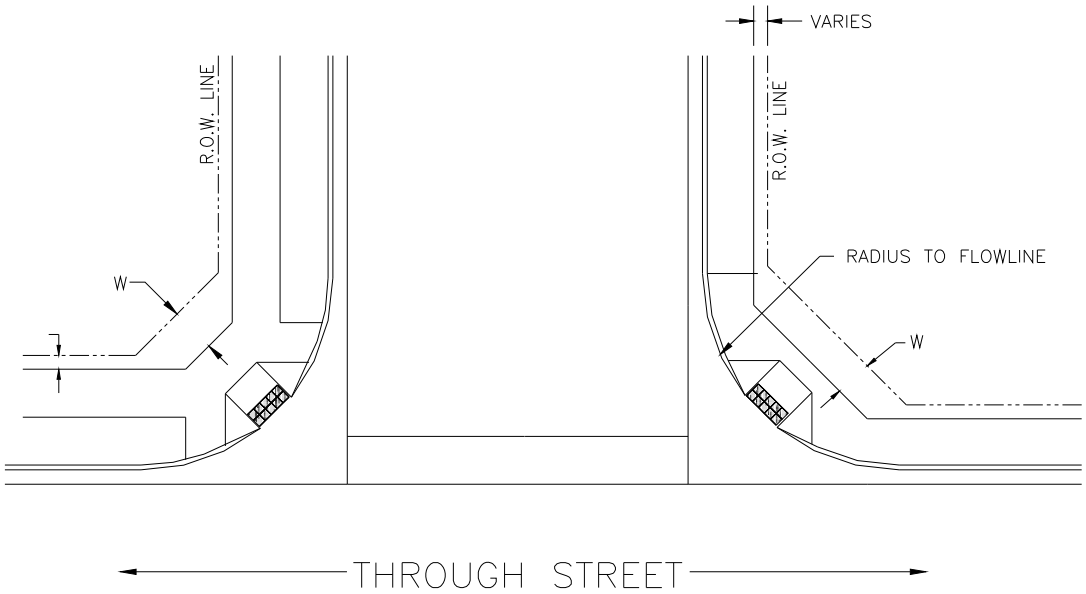

INTERSECTING STREETS	RADIUS TO FLOWLINE OF GUTTER
MAJOR ARTERIAL	35'
MINOR ARTERIAL	30'
COLLECTOR	30'
URBAN STREET	25'
RESIDENTIAL STREET	20'

NOTE: USE COLLECTOR STREET DIMENSIONS FOR COMMERCIAL STREETS.

Z:\Specifications\Engineering Specifications\Concrete Standards\C-22_2011.dwg

RADII AND RIGHT-OF-WAY WIDTH AT INTERSECTIOIN CORNER

MONTROSE	ENGINEERING DEPARTMENT	STANDARD CONCRETE DETAILS	APPROVED: JRH REV: JAN 2011 DRAWN BY: RLW	PAGE C-22

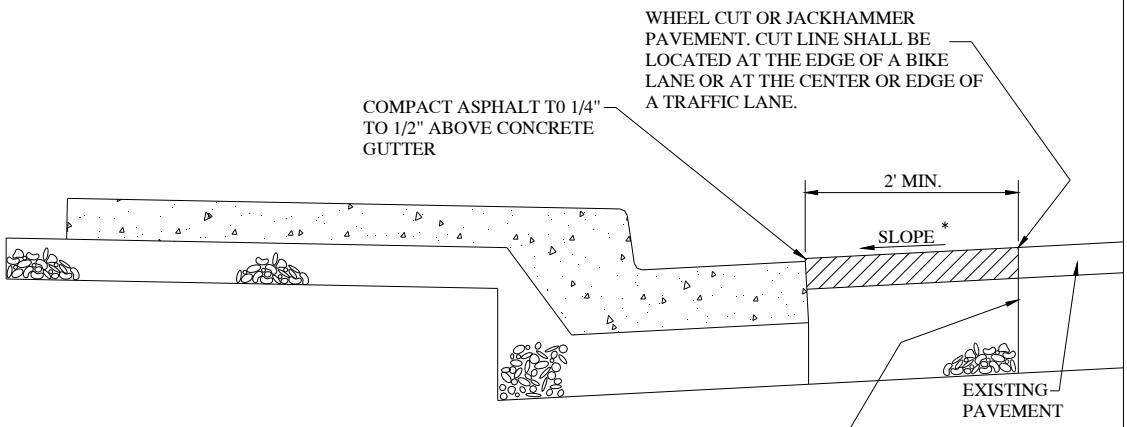

HOT MIX ASPHALT (HMA) PATCH SECTION SHALL MATCH EXISTING PAVEMENT AND BASE COURSE THICKNESSES, BUT NOT LESS THAN 3" HMA AND 6" AGGREGATE BASE COURSE (A.B.C.). COMPACT BASE COURSE TO 95% AASHTO T-180. COMPACT ASPHALT FROM 92% TO 96% OF MAXIMUM THEORETICAL DENSITY CP51-96. H.B.P. SHALL BE REPLACED IN LIFTS NOT TO EXCEED 3" COMPACTED THICKNESS. HMA SHALL CONFORM TO SECTION 403 OF THE CURRENT CDOT STANDARD SPECIFICATION FOR ROAD AND BRIDGE CONSTRUCTION.

ON NEWER PAVEMENTS (LESS THAN 10 YEARS OLD) SEAMLESS PATCHES SHALL BE INSTALLED USING THE INFRARED HEATING PROCESS.

STREET CLASSIFICATION	PAVEMENT CROSS-SLOPES	
	MINIMUM	MAXIMUM
URBAN RESIDENTIAL	2%	6%
ALL OTHERS	2%	4%

FOR REPLACEMENT OR ADDITION OF CURB, GUTTER AND SIDEWALK

ASPHALT PATCHING

MONTROSE	ENGINEERING DEPARTMENT	STANDARD CONCRETE DETAILS	APPROVED: JRH REV: JAN 2011 DRAWN BY: RJW	PAGE C-23

Z:\Specifications\Engineering Specifications\Concrete Standards\C-23_2011.dwg

JOINT SEALANT SHALL BE POLYURETHANE CONFORMING TO ASTM C-920-87, NPI OR SILICONE CONFORMING TO CURRENT CDOT STANDARD SPECIFICATIONS, SECTION 705.01. SEALANT SHALL BE SAME COLOR AS CONCRETE.

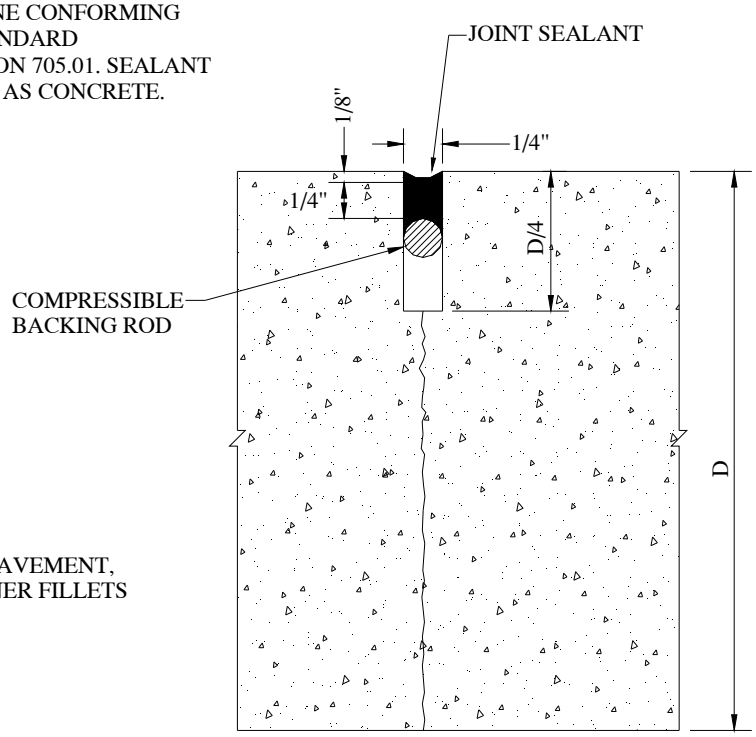

ALL JOINTS IN CONCRETE PAVEMENT, DRAINAGE PANS AND CORNER FILLETS SHALL BE SEALED.

CONTRACTION JOINT

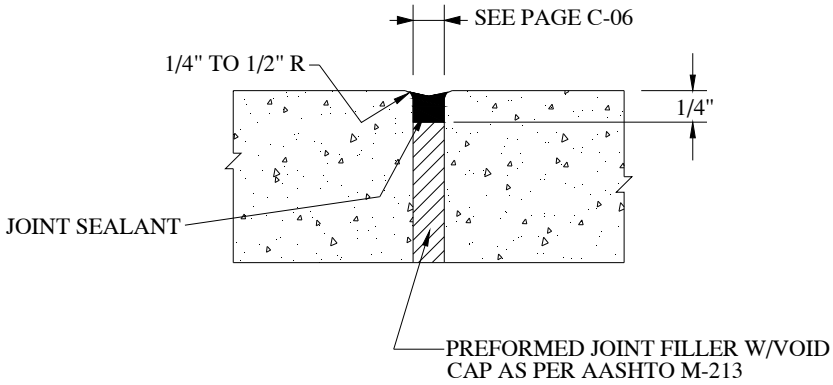

EXPANSION JOINT

Z:\Specifications\Engineering Specifications\Concrete Standards\C-24_2011.dwg

JOINT SEAL				
MONTROSE	ENGINEERING DEPARTMENT	STANDARD CONCRETE DETAILS	APPROVED: JRH REV: JAN 2011 DRAWN BY: RLW	PAGE C-24

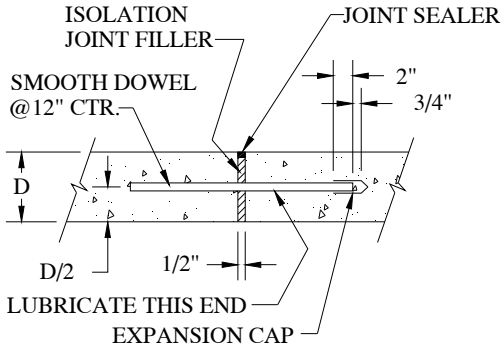

DOWELED ISOLATION OR EXPANSION JOINT

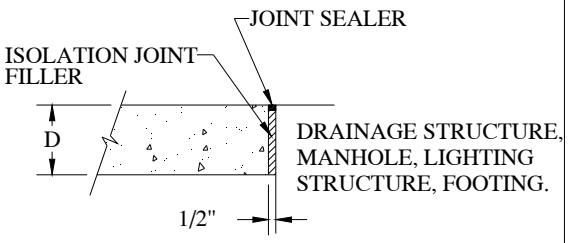

UNDOWELED ISOLATION JOINT

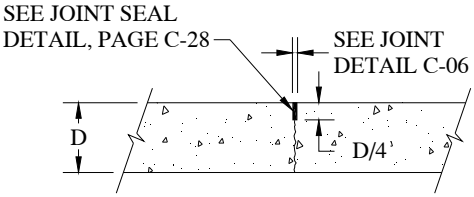

UNDOWELED CONTRACTION JOINT

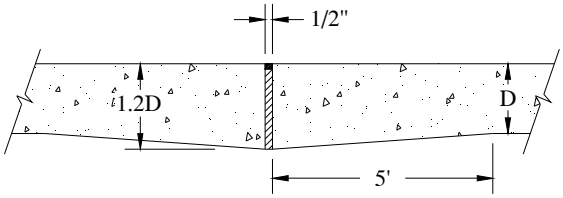

THICKENED EDGE ISOLATION JOINT

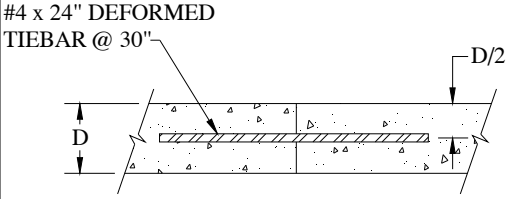

EMERGENCY CONSTRUCTION JOINT
(LOCATED IN MIDDLE 2/3 OF
NORMAL JOINT INTERVAL)

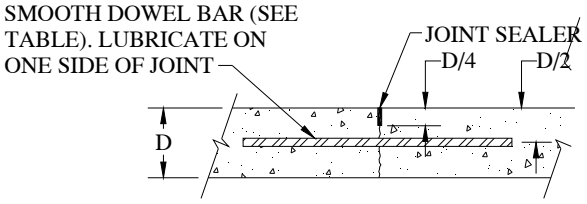

DOWELED CONTRACTION JOINT OR
PLANNED CONSTRUCTION JOINT

DOWEL SIZE FOR JOINTED REINFORCED PAVEMENTS AND CONSTRUCTION JOINTS		
SLAB DEPTH INCHES	DOWEL DIAMETER INCHES	TOTAL DOWEL LENGTH INCHES
6.0	3/4	14
6.5	7/8	14
7.0	1	16
7.5	1-1/8	16
8.0	1-1/4	17

NOTES

1. ALL JOINTS IN CONCRETE PAVEMENT SHALL BE SEALED PER DETAILS ON PAGE C-28.
2. SEE PAGE C-30 FOR LONGITUDINAL JOINT DETAILS.
3. ALL HANDTOOLED JOINTS SHALL BE FINISHED WITH A 1/4" OR SMALLER RADIUS.

JOINT DETAILS FOR CONCRETE PAVEMENT

MONTROSE	ENGINEERING DEPARTMENT	STANDARD CONCRETE DETAILS	APPROVED: JRH REV: JAN 2011 DRAWN BY: RLW	PAGE C-25

Z:\Specifications\Engineering Specifications\Concrete Standards\C-25_2011.dwg

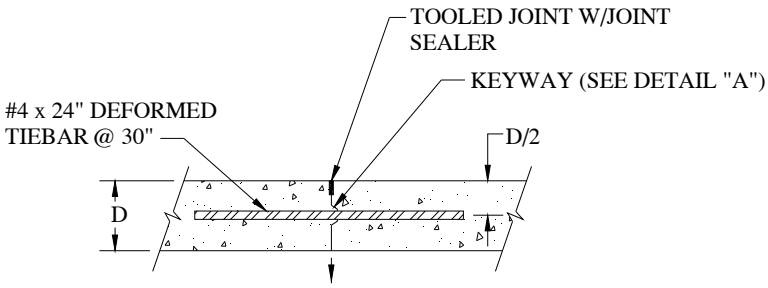

LONGITUDINAL CONSTRUCTION JOINT
LANE AT A TIME PAVING

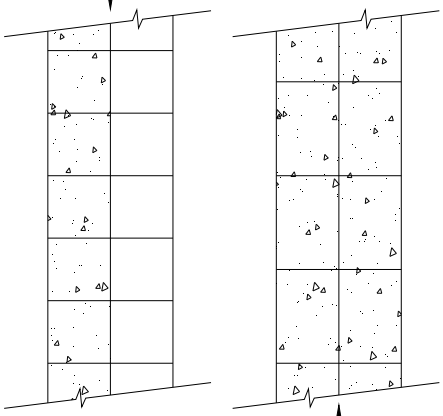

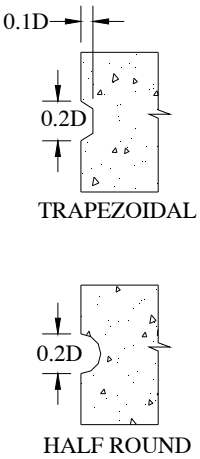

STANDARD KEYWAY DIMENSIONS
DETAIL "A"

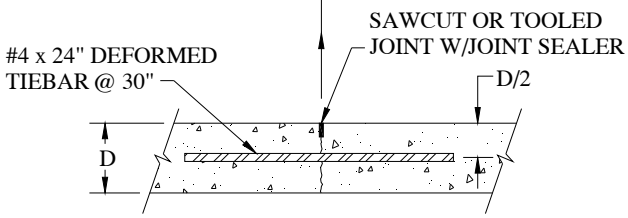

LONGITUDINAL JOINT - FULL WIDTH PAVEMENT

Z:\Specifications\Engineering Specifications\Concrete Standards\C-26_2011.dwg

LONGITUDINAL JOINTS FOR CONCRETE PAVEMENT				
MONTROSE	ENGINEERING DEPARTMENT	STANDARD CONCRETE DETAILS	APPROVED: JRH REV: JAN 2011 DRAWN BY: RLW	PAGE C-26

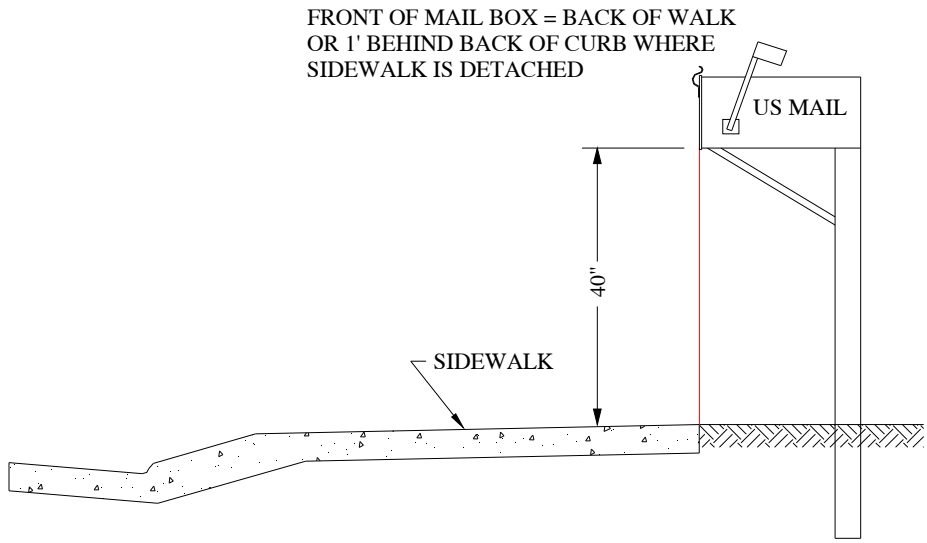

Z:\Specifications\Engineering Specifications\Concrete Standards\C-27_2011.dwg

MAIL BOX INSTALLATION

MONTROSE	ENGINEERING DEPARTMENT	STANDARD CONCRETE DETAILS	APPROVED: JRH REV: JAN 2011 DRAWN BY: RLW	PAGE C-27

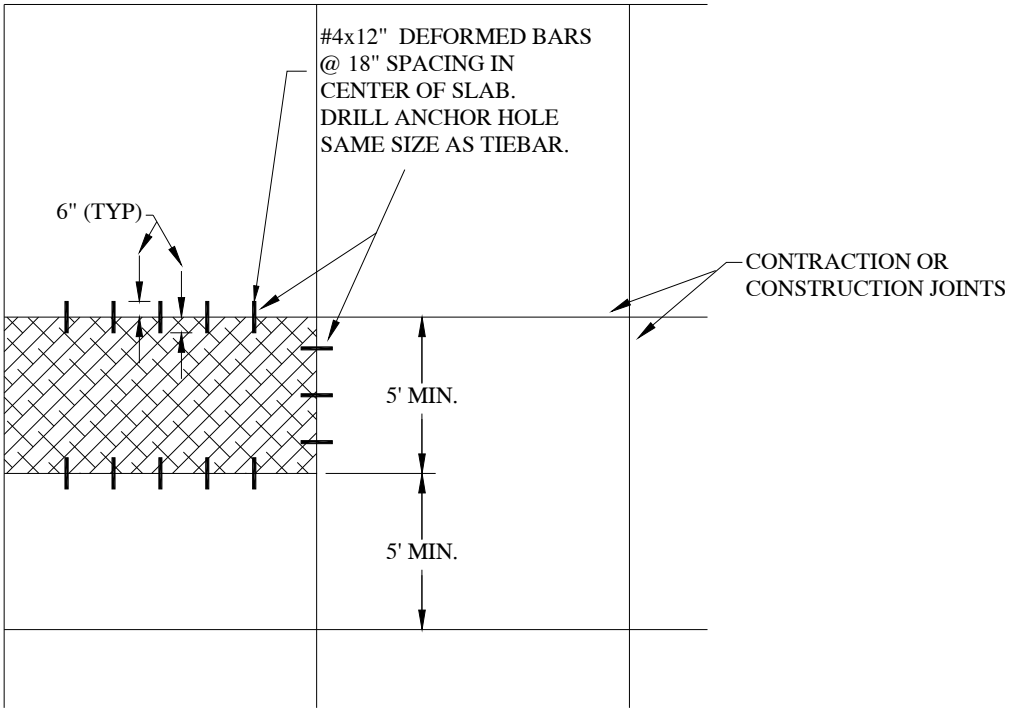

1. CONCRETE SHALL BE SAW CUT OR REMOVED TO AN EXISTING JOINT.

2 . ALL JOINTS SHALL BE CUT THROUGH AT LEAST 90% OF CONCRETE THICKNESS PRIOR TO CONCRETE REMOVAL.

3. CONCRETE EDGES OR SURFACES THAT ARE BROKEN, CHIPPED, CRACKED OR OTHERWISE DAMAGED DURING PAVEMENT REMOVAL SHALL BE CUT AND REMOVED AS DIRECTED BY THE CONSTRUCTION INSPECTOR.

4. ALL PATCHES SHALL BE MADE WITH CDOT CLASS B OR D CONCRETE. SAME THICKNESS AS ADJACENT PAVEMENT.

Z:\Specifications\Engineering Specifications\Concrete Standards\C-28_2011.dwg

PATCH IN CONCRETE PAVEMENT				
MONTROSE	ENGINEERING DEPARTMENT	STANDARD CONCRETE DETAILS	APPROVED: JRH REV: JAN 2011 DRAWN BY: RLW	PAGE C-28